Sheet #	Content
01.	Table of Content
02.	Revision History
03.	Block Diagram
04.	SM6115_CONTROL
05.	SM6115_GPIO
06.	SM6115_EBI01
07.	SM6115_ MIPI-CSI&DSI
08.	SM6115_WCSS&RF
09.	SM6115_PWR_1
10.	SM6115_PWR_2
11.	SM6115_PWR_3
12.	SM6115_DECAPs
13.	SM4250_GND
14.	PM4250_HK_IO
15.	PM4250_BUCKs_S1-S8
16.	PM4250_LDOs
17.	PMI632_Control
18.	PMI632_Charger
19.	PMI632_LCD&VIB&LED&Flash
20.	eMMC&LPDDR4
21.	eMMC&LPDDR4_Power
22.	Battery&USB_IF
23.	Audio codec
24.	EAR&Smart_PA
25.	CAMERA_IF
26.	SENSOR
27.	SIM_TF
28.	KEY&TEST POINT
29.	SUB_CONN
30.	Display_IF
33.	WTR3925
34.	TXM_MMMPA
35.	PRX_DUPLEXER
36.	DRX_SAW
37.	QET4101
38.	WCN3950
39.	WIFI_GPS

Title	<Title>	
Size D	Document Number <Doc>	Rev <RevCode>
Date: Thursday, September 07, 2023	Sheet 1 of 58	

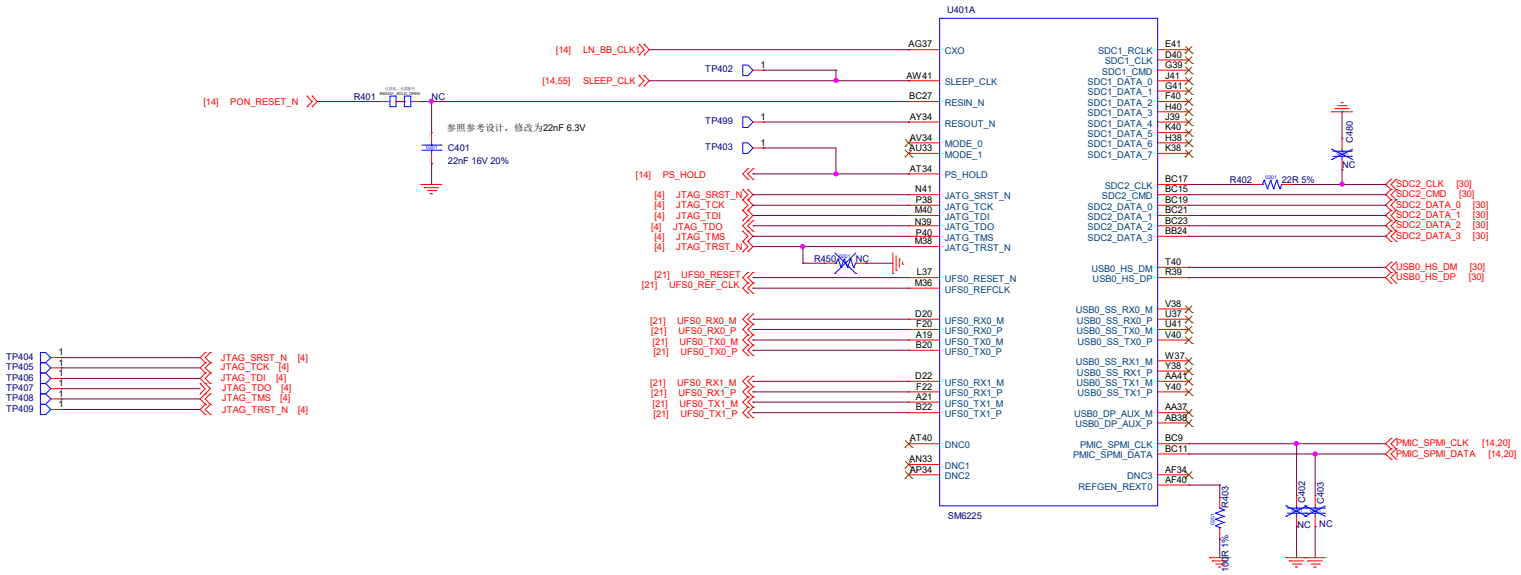

Double comfirm the connection on REFGEN

Place near to the SDM about 1cm and put into the shielding

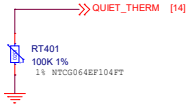

Title	<Title>	
Size C	Document Number <Doc>	Rev <RevCode>
Date: Thursday, September 07, 2023	Sheet 4 of 58	

BOOT CONFIG GPIOS	FUNCTIONALITY
GPIO_95	FORCED_USB_BOOT
BOOT_CONFIG[0]: GPIO_48	WDOG_DISABLE
BOOT_CONFIG[1]: GPIO_50	FASTBOOT_SEL[0]
BOOT_CONFIG[2]: GPIO_51	FASTBOOT_SEL[1]
BOOT_CONFIG[3]: GPIO_53	FASTBOOT_SEL[2]
BOOT_CONFIG[4]: GPIO_55	FASTBOOT_SEL[3]
GPIO_94	FORCED_USB_BOOT_POL_SEL

FASTBOOT_SEL[3:0]	BOOT OPTIONS
0b0000	0: Default (eMMC -> SD -> eDL (eDL path- USB only)
0b0001	1: SD -> eMMC-> eDL (eDL path USB only)
0b0010	2: SD -> eDL (eDL path- USB only)
0b0011	3: USB-> eDL (eDL path- SD then USB)
0b0100 *	4: SD -> UFS HS G1 -> eDL (eDL path USB only)
0b0101	5: UFS HS G1 -> SD -> eDL (eDL path- USB only)
0b1100	6: UFS HS G1 -> eDL (eDL path- USB only)
0b0111	7: eMMC -> SD -> eDL(eDL path-USB only)
0b1000	8: eMMC -> eDL (eDL path - USB only)

GPIO94 用于设置eDL脚的状态。
当下拉时，GPIO_95拉高进入eDL
当上拉时，GPIO_95拉低进入eDL

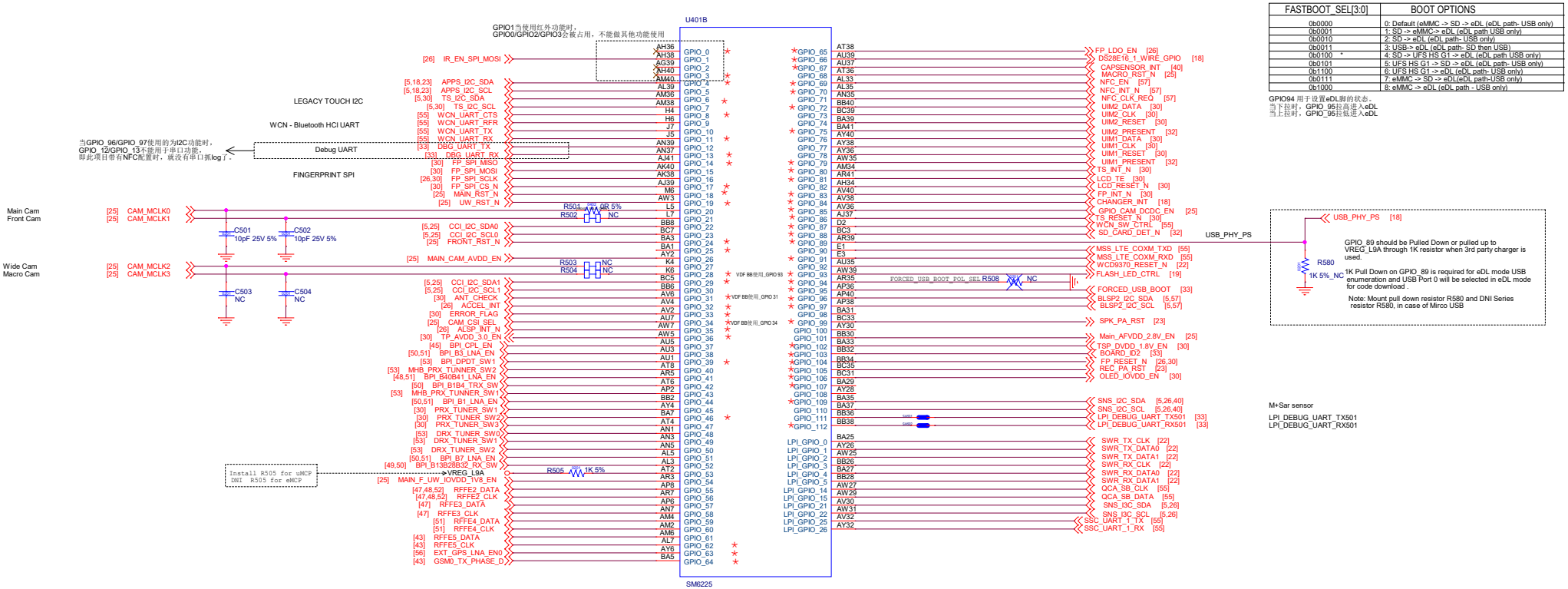

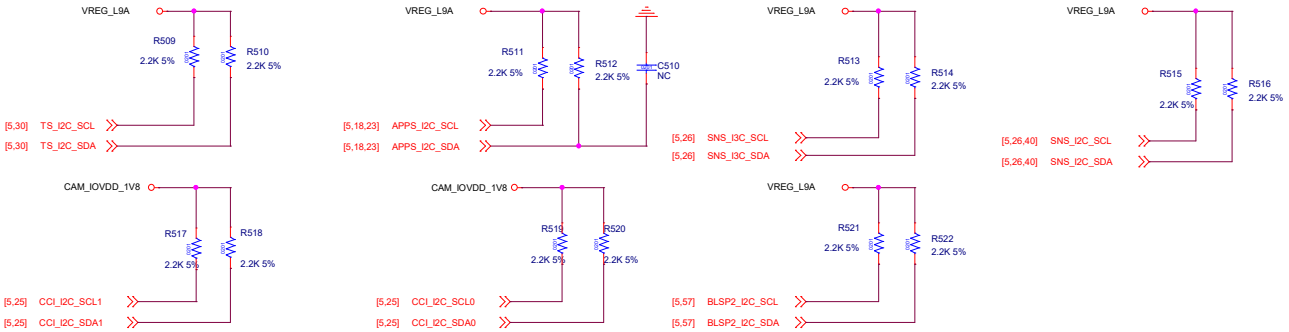

APPS_I2C_SCL

F-LED Drv	LM36011YKBR	0x64 400
	KTD2691ERAA-TA	0x64 400/100
Smart PA	*AW87559 SCL	0x59 400
	~~*FS1815N SCL~~	~~0x34 400/1M~~
	*SIA8159 SCL	0x2A 400/100
33W Charger	SC8551	0x66 400
	LN8000	0x51 400
Fuel Guage	SM5602	0x71 400/100
4-CH LDO	WL2866D-10/TR	0x28 400/100
	ET5904	0x28 400/100
Main Charger	SY6970DQCQ	0x6A 400/100
	SC88890H	0x6A 400/100
CC_LOGIC	RT1715WSC	0x4E 400/100
	HUSB311ACC	0x4E 400

注：HUSB311ACC 请与供应商再次确认

TS_I2C_SCL

CTP		

SNS_I3C_SCL

M-Sensor	AK09918C	0x0C 100/400
	QMC6308	0x2C 100/400
A+G-Sensor	BMI320	0x68 100/400
	ICM-42607-M	0x68 100/400

SNS_I2C_SCL

PL-Sensor	TMD27553	0x39 100/400
Sar-Sensor	SX9325	0x28 100/400

CCI_I2C_SCL0

Main-CAM		

CCI_I2C_SCL1

Front-CAM		
Wide-CAM		
Macro-CAM		

BLSP2_I2C_SCL

NFC	ST21NFCJ	

Title	<Title>	
Size C	Document Number <Doc>	Rev <RevCode>
Date: Thursday, September 07, 2023	Sheet 5 of 58	

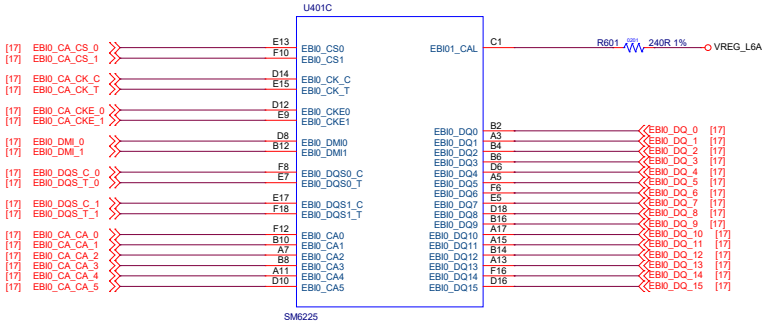

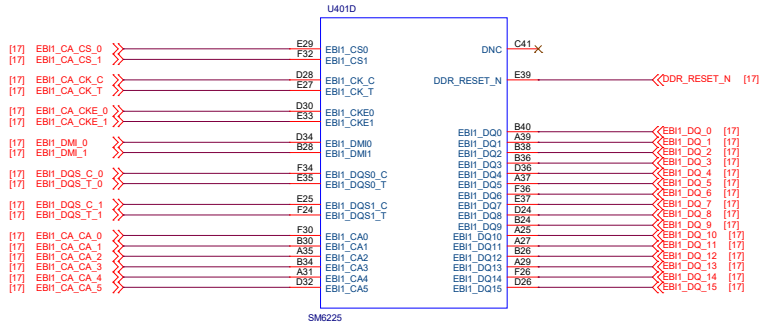

Title	<Title>	
Size C	Document Number <Doc>	Rev <RevCode>
Date: Thursday, September 07, 2023	Sheet 6 of 58	

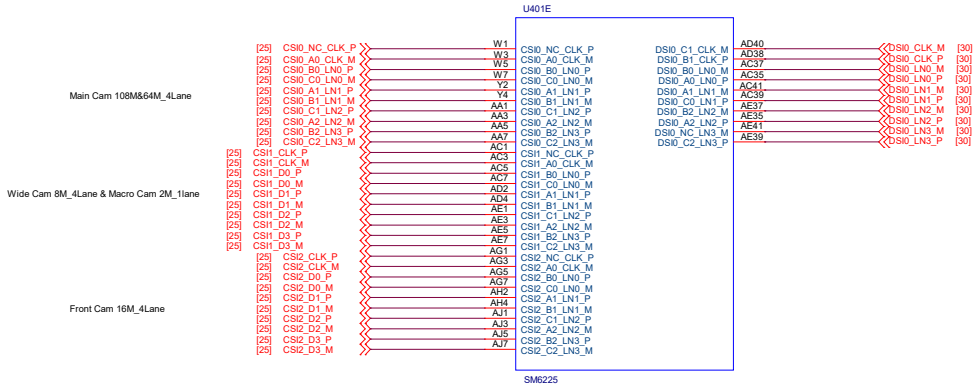

Title	<Title>	
Size C	Document Number <Doc>	Rev <RevCode>
Date: Thursday, September 07, 2023	Sheet 7 of 58	

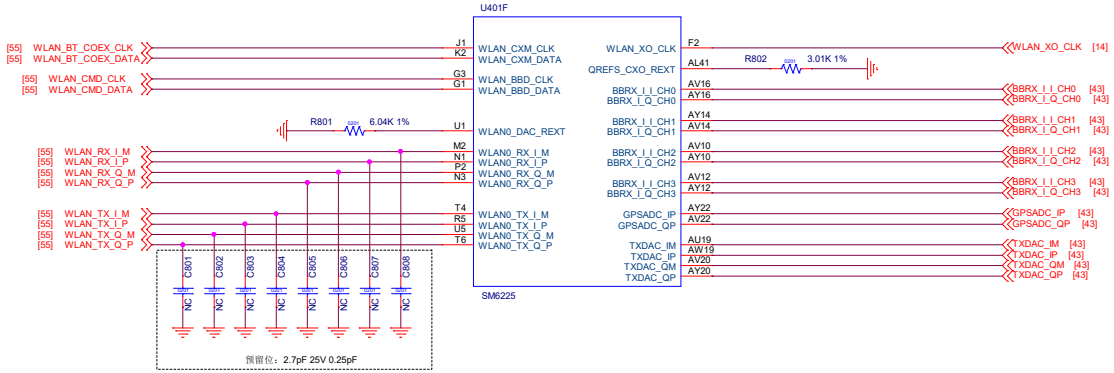

Title	<Title>	
Size C	Document Number <Doc>	Rev <RevCode>
Date: Thursday, September 07, 2023	Sheet 8 of 58	

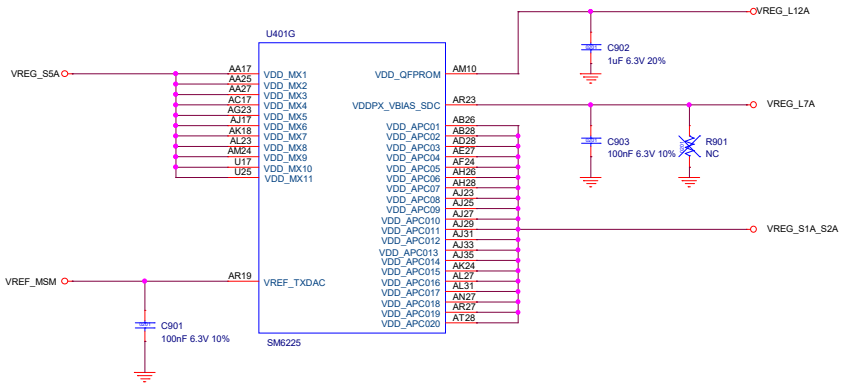

Title	<Title>	
Size C	Document Number <Doc>	Rev <RevCode>
Date: Thursday, September 07, 2023	Sheet 9 of 58	

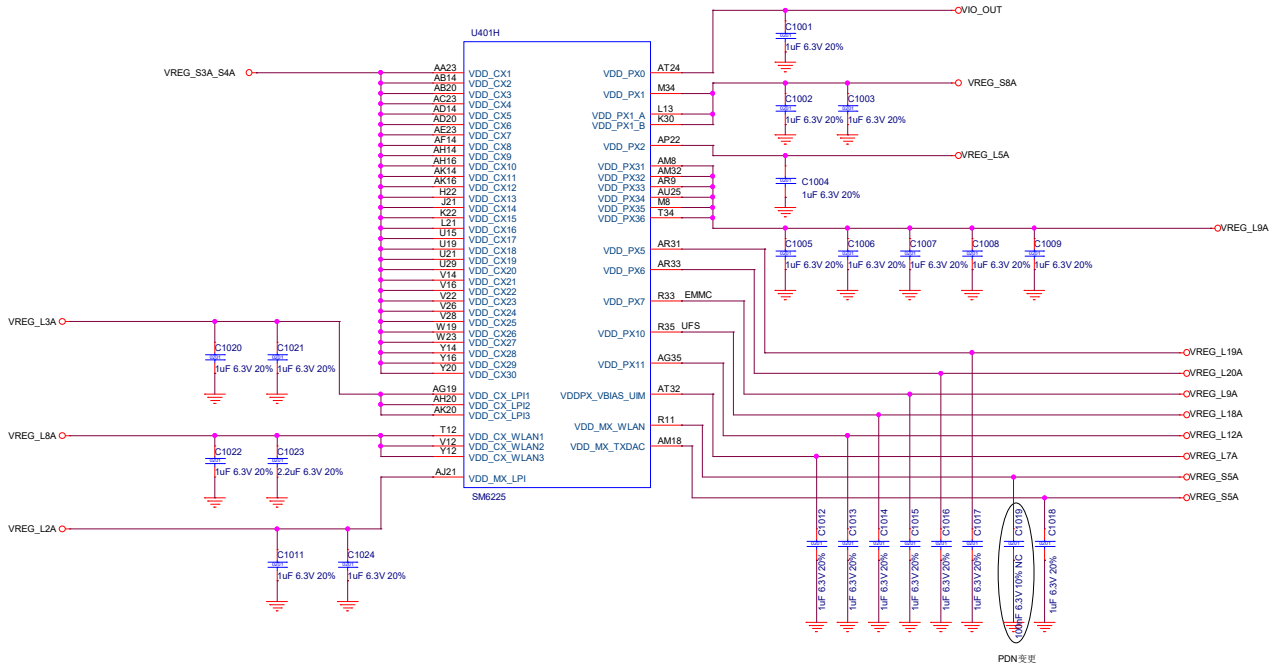

Title	<Title>		
Size C	Document Number <Doc>		Rev <RevCode>
Date: Thursday, September 07, 2023	Sheet 10 of 58		

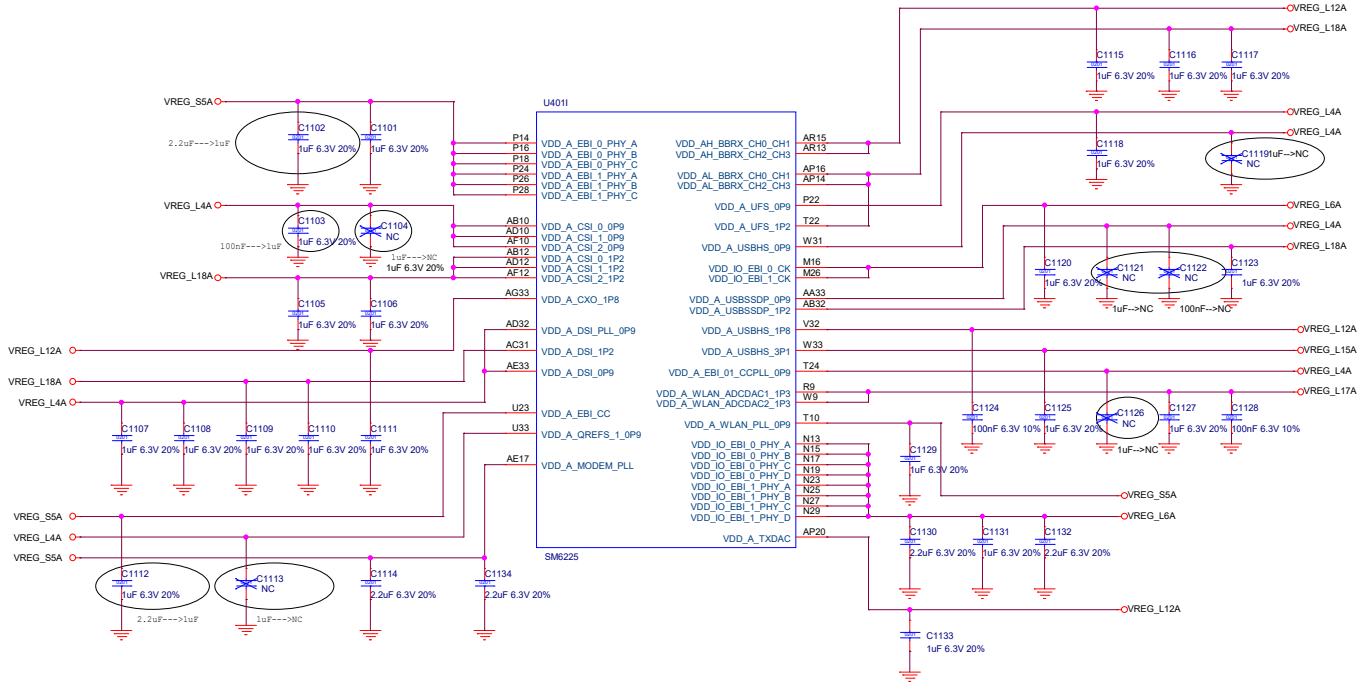

Title	<Title>	
Size C	Document Number <Doc>	Rev <RevCode>
Date: Thursday, September 07, 2023	Sheet 11 of 58	

CX MODEM

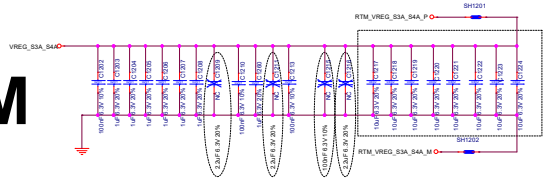

MX

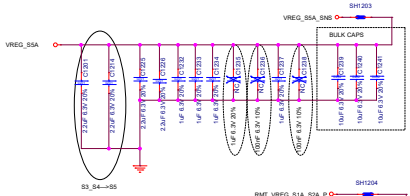

APC

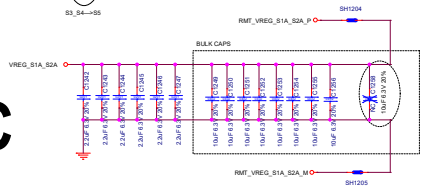

Title:	<Title>		
Size: D	Document Number: <Doc>		Rev: <RevCode>
Date: Thursday, September 07, 2023	Sheet 12 of 58		

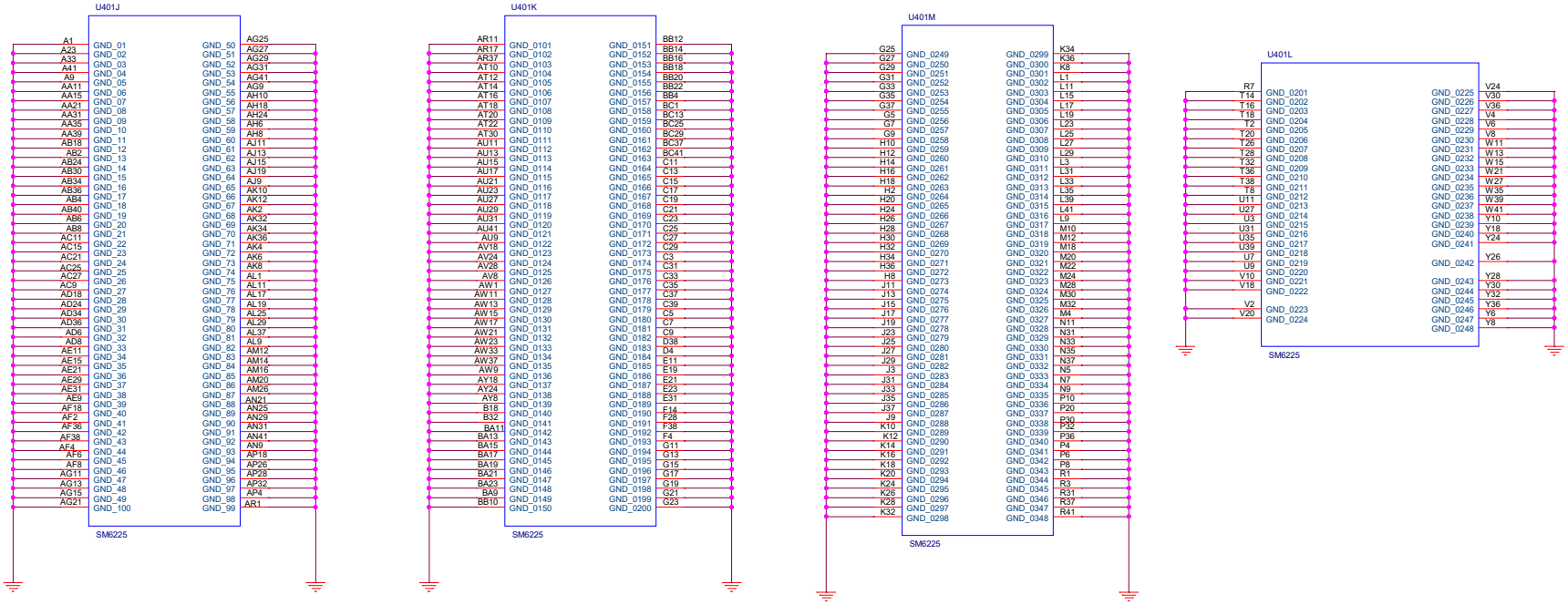

Title	<Title>		
Size C	Document Number <Doc>		Rev <RevCode>
Date: Thursday, September 07, 2023	Sheet 13 of 58		

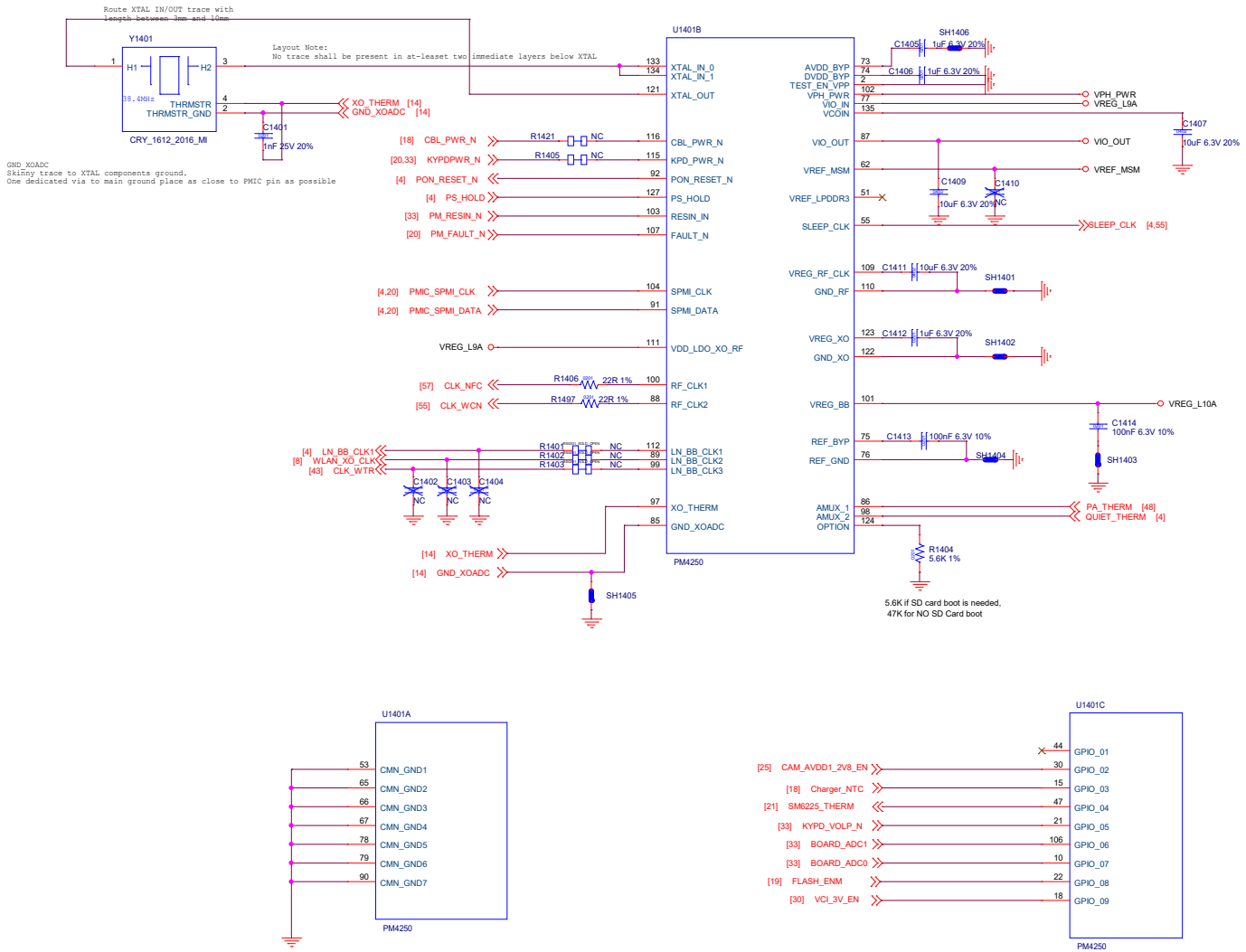

PM6225 part looks fine, but one important point is that GPIO1 should not be used for other purpose. It is part of power on sequence to enable eLDO for USB SS_DP please refer 80-26896-41 document

Title	<Title>	
Size C	Document Number <Doc>	Rev <RevCode>
Date: Thursday, September 07, 2023	Sheet 14 of 58	

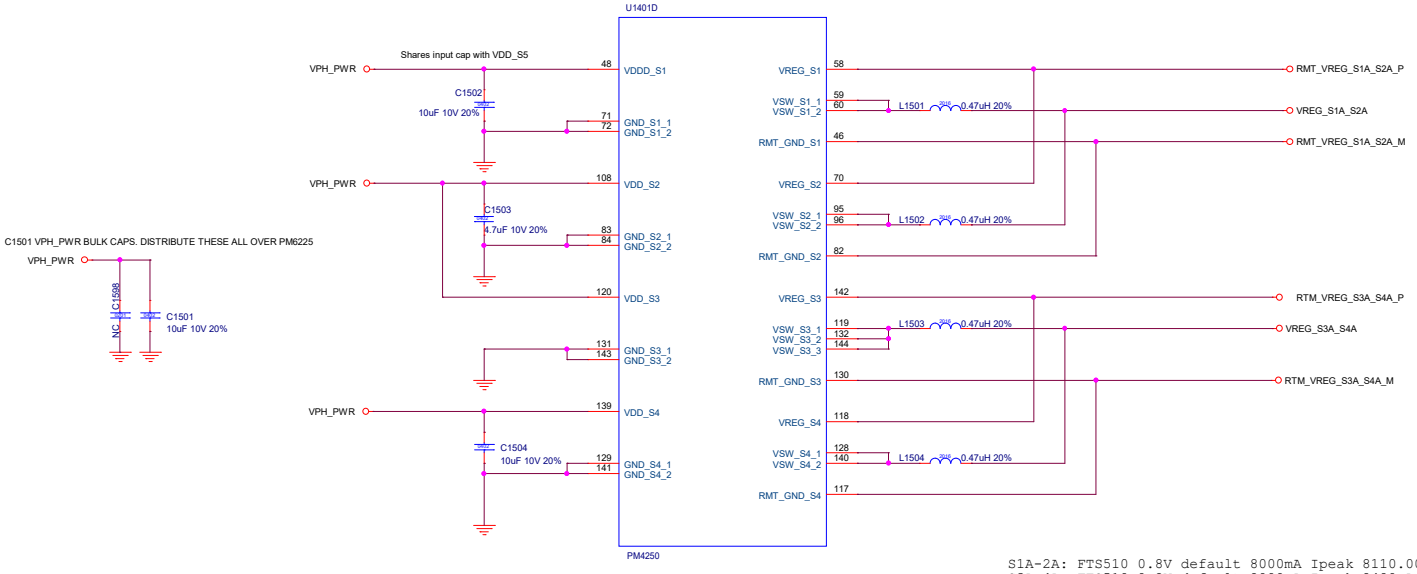


```
S1A-2A: FTS510 0.8V default 8000mA Ipeak 8110.00mA APC
S3A-4A: FTS510 0.8V default 8000mA Ipeak 8480mA CX, MODEM
S5A: HFS510 0.912V default 4000mA Ipeak 3620.00mA EBI, MX, nLDO
S6A: HFS510 1.352V default 4000mA Ipeak 1560mA LDO
S7A: HFS510 2.04V default 2500mA Ipeak 2350mA LDO
S8A: FTS510 1.128V default 4000mA Ipeak 1790mA LDO, LPDDR4x
```

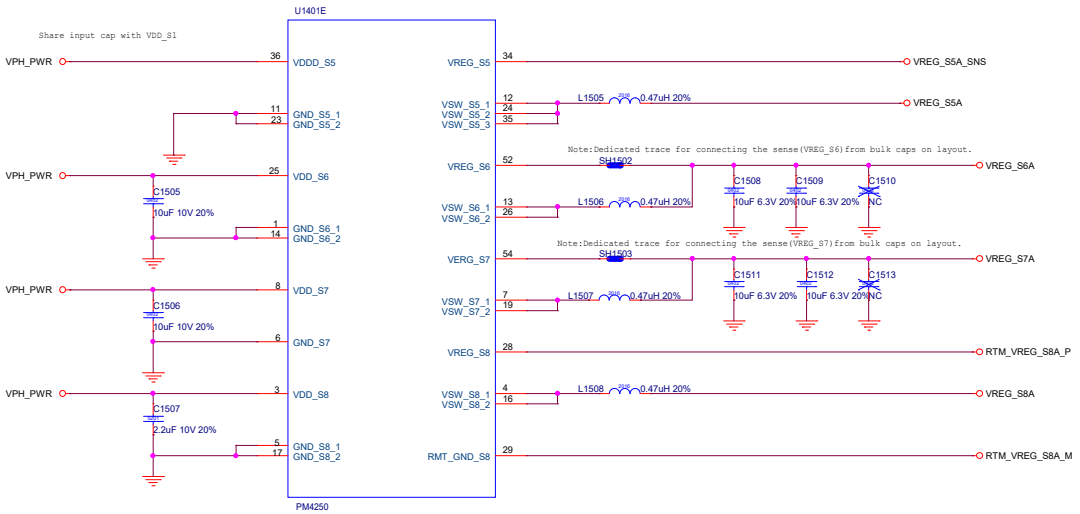

Title	<Title>	
Size C	Document Number <Doc>	Rev <RevCode>
Date: Thursday, September 07, 2023	Sheet 15 of 58	

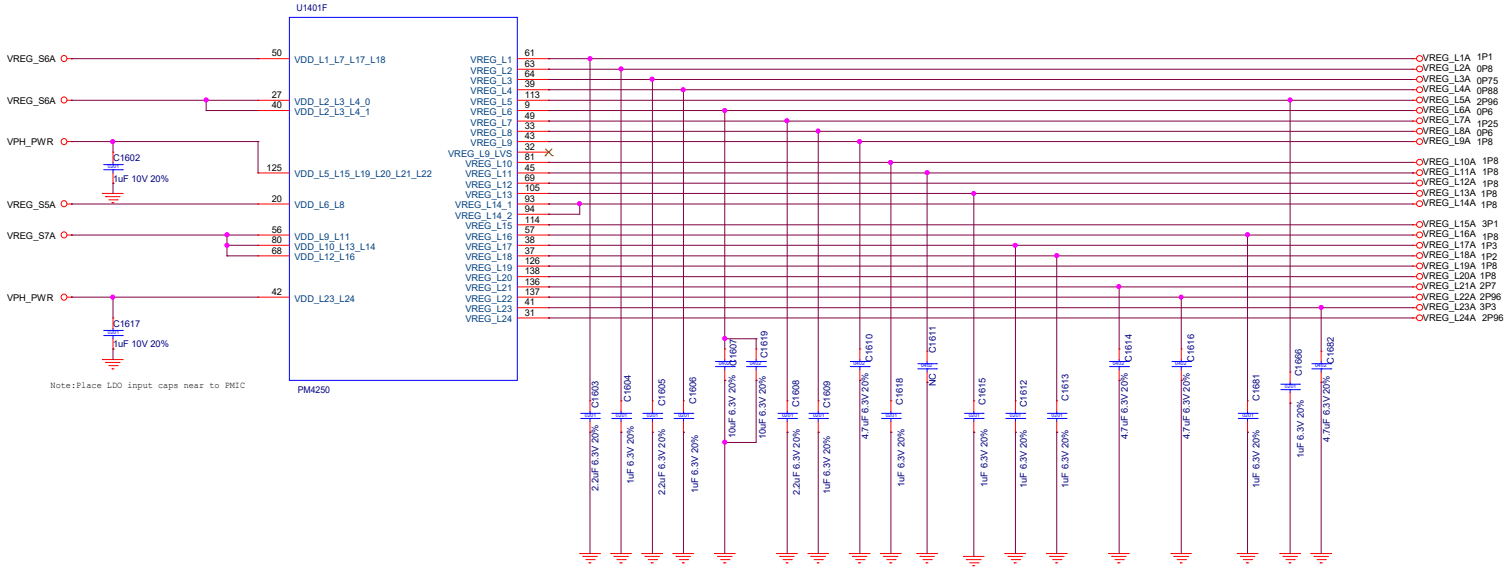

Regulator	Circuit type	I_{RATED} (mA)	Default on booting voltage (V) [1]	Specified range (V)	Programmable range (V)	Default on
L1	N600	600	1.0	0.95–1.15	0.312–1.304	Y
L2	N300	300	0.848	0.488–0.988	0.312–1.304	Y
L3	N600	600	0.8	0.4–1.08	0.312–1.304	Y
L4	N300	300	0.928	0.488–1.0	0.312–1.304	Y
L5	MV P50	50	2.96	1.65–3.05	1.504–3.544	Y
L6	N1200	1200	0.624	0.57–0.65	0.312–1.304	Y
L7	N600	600	1.256	1.2–1.3	0.312–1.304	Y
L8	N300	300	0.664	0.4–0.728	0.312–1.304	Y

Regulator	Circuit type	I_{RATED} (mA)	Default on booting voltage (V) [1]	Specified range (V)	Programmable range (V)	Default on
L9 [2]	LV P600	600	1.8	1.8–2.0	1.504–2.000	Y
L10	LV P150	150	1.8	1.7–1.9	1.504–2.000	Y
L11	LV P600	600	1.8	1.7–1.95	1.504–2.000	Y
L12	LV P300	300	1.8	1.62–1.98	1.504–2.000	Y
L13	LV P300	300	1.8	1.5–1.95	1.504–2.000	Y
L14	LV P600	600	1.8	1.7–1.9	1.504–2.000	N
L15	MV P150	150	3.128	2.92–3.23	1.504–3.544	Y
L16	LV P150	150	1.8	1.7–1.9	1.504–2.000	N
L17	N300	300	1.304	1.15–1.39	0.312–1.304	N
L18	N300	300	1.232	1.1–1.312	0.312–1.304	Y
L19	MV P150	150	1.8	1.62–3.3	1.504–3.544	N
L20	MV P150	150	1.8	1.62–3.3	1.504–3.544	N
L21	MV P600	600	2.704	2.4–3.6	1.504–3.544	N
L22 [3]	MV P600	600	2.96	2.95–3.3	1.504–3.544	Y
L23	MV P600	600	3.304	3.2–3.4	1.504–3.544	N
L24	MV P600	600	2.96	2.7–3.6	1.504–3.544	Y

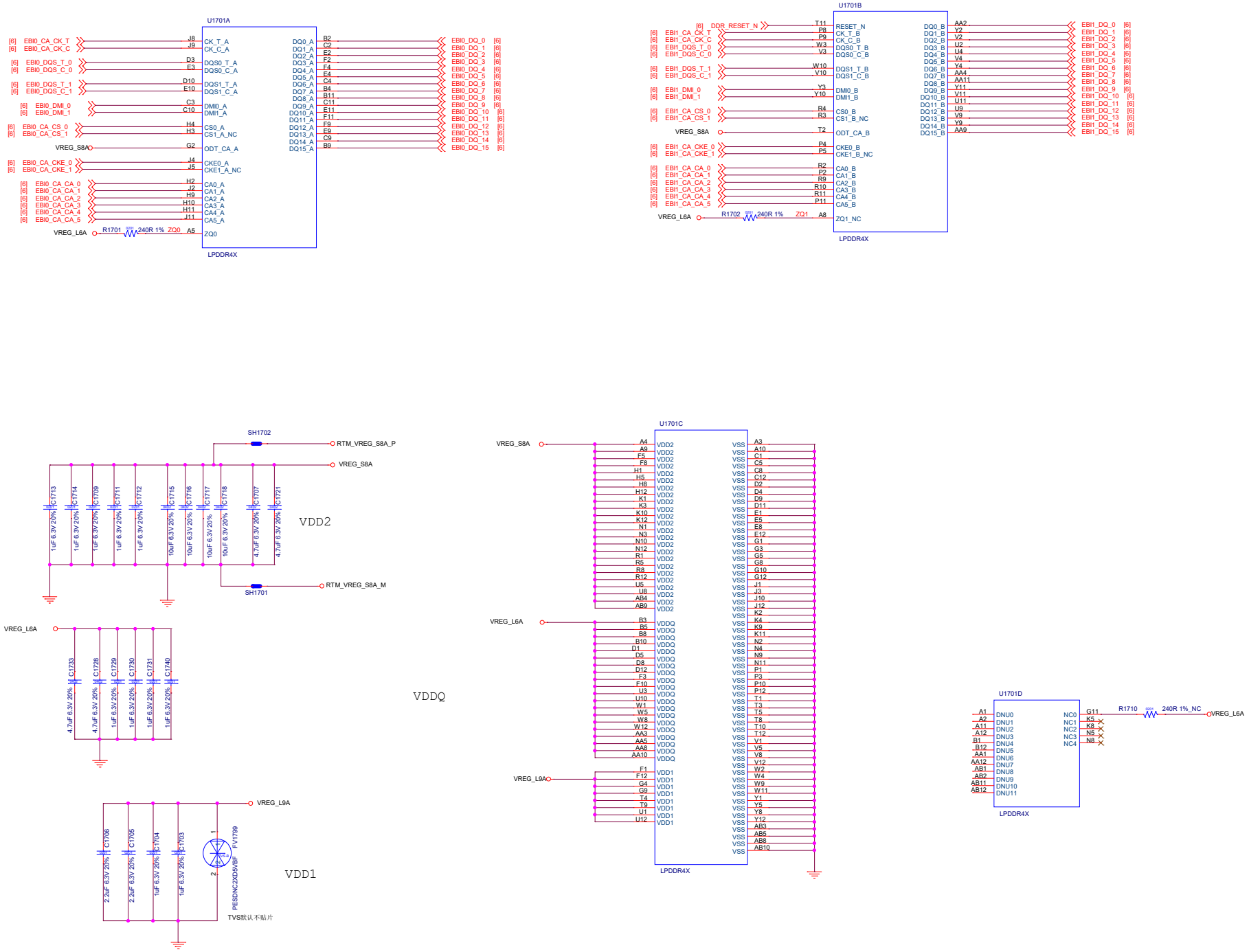

Title	<Title>		
Size C	Document Number <Doc>		Rev <RevCode>
Date: Thursday, September 07, 2023	Sheet 17 of 58		

Charger SC8541

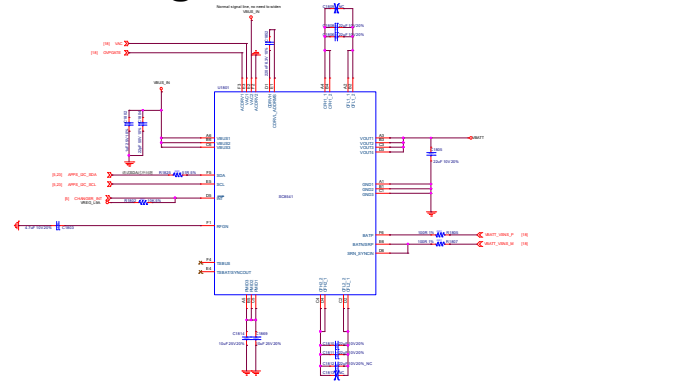

BATTERY

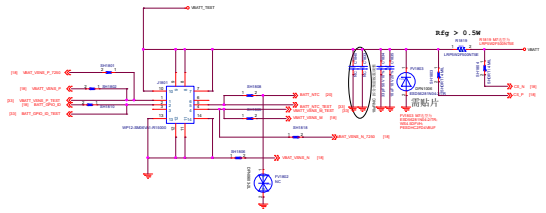

默认不贴

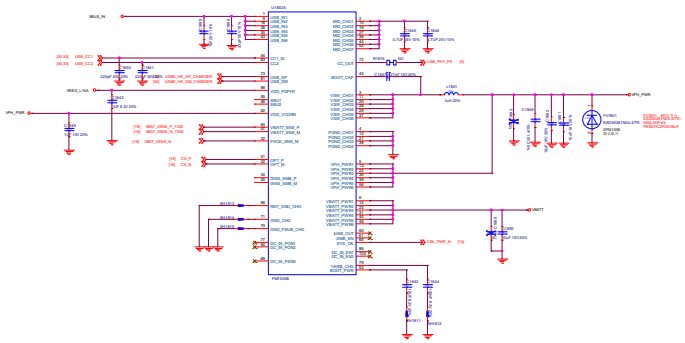

OVP

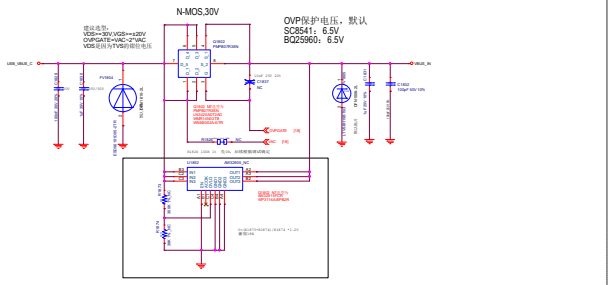

Battery Ecrypt IC

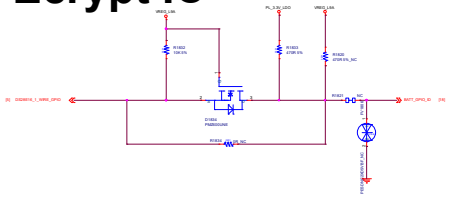

Flash LED Driver

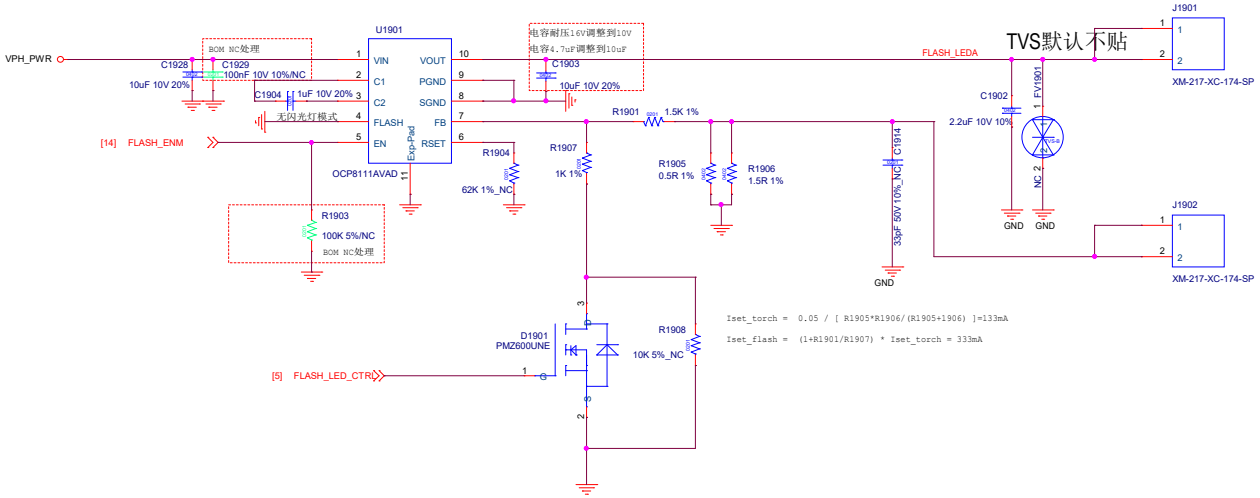

Title	<Title>	
Size C	Document Number <Doc>	Rev <RevCode>
Date: Thursday, September 07, 2023	Sheet 19 of 58	

PON Configuration	OPTION Resistor Range
Micro USB, SPMI, FMB_DISABLE	R=(GND, 1K, 1.2K, 2.2K, 2.4K)
Micro USB, SPMI, FMB_ENABLE	R=(3.3K, 3.6K, 5.1K, 5.6K)
Micro USB, I2C, FMB_DISABLE	R=(8.2K, 10K, 15K, 16K)
Micro USB, I2C, FMB_ENABLE	R=(22K, 27K, 36K, 39K)
Type-C, I2C, FMB_DISABLE	R=(56K, 68K, 91K, 100K)
Type-C, I2C, FMB_ENABLE	R=(130K,150K, 220K, 240K)
Type-C, SPMI, FMB_ENABLE	R=(300K, 330K, 470K, 560K)
Type-C, SPMI, FMB_DISABLE	R=(820K, 910K, 1.2M, Open)

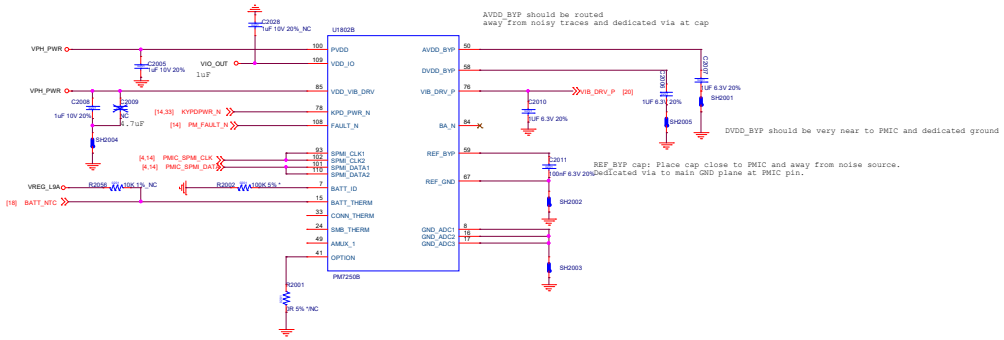

MOTO

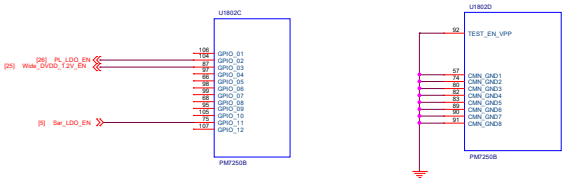

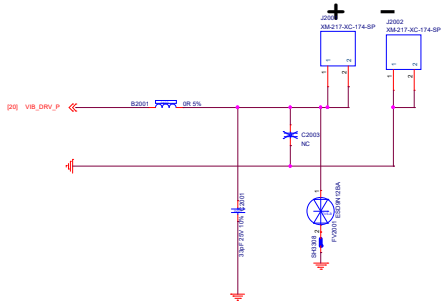

GPIO_01, GPIO_05, GPIO_08, GPIO_11, and GPIO_12: AMUX/ADC input

GPIO_09 and GPIO_10: factory mode boot signals

MOTO

Title:	<Title>		
Size: D	Document Number: <Doc>		Rev: <RevCode>
Date: Thursday, September 07, 2023	Sheet 20 of 58		

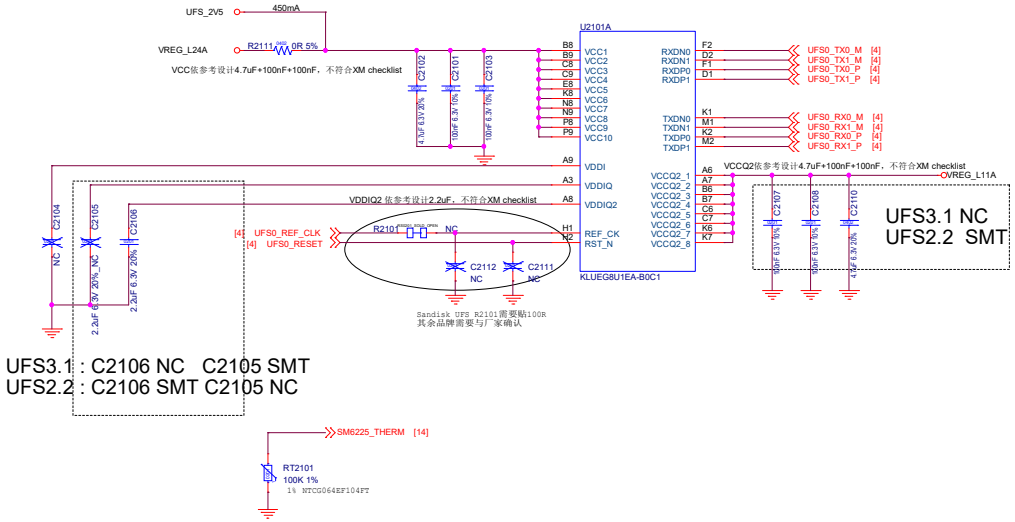

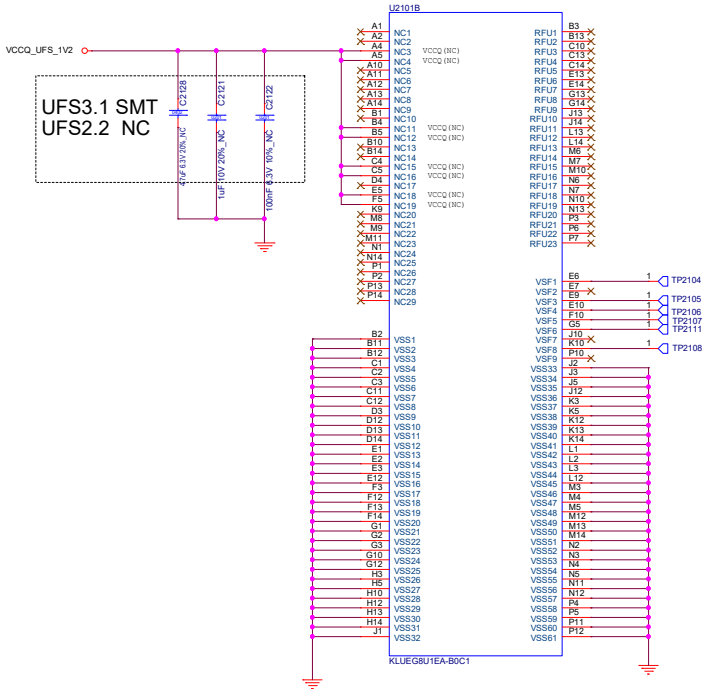

DCDC UFS3.1 VCCQ_1V2

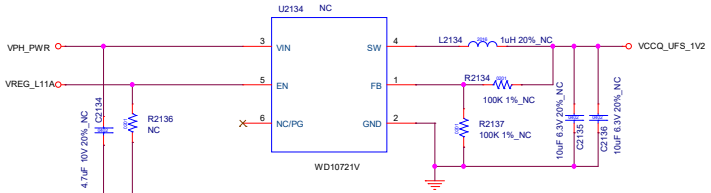

WILL:Vout= 0.6*(1+R2134/R2137)
SGM:Vout= 0.63*(1+R2134/R2137)

DCDC UFS3.1 VCC_2V5

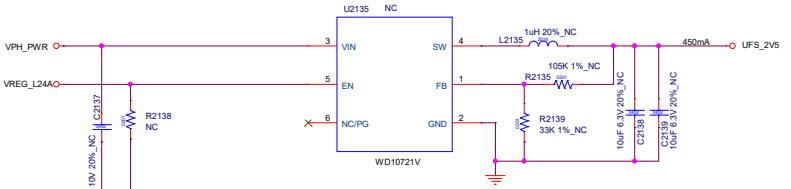

WILL:Vout= 0.6*(1+R2135/R2139)
SGM:Vout= 0.63*(1+R2135/R2139)

Title <Title>		
Size A2	Document Number <Doc>	Rev <RevC>
Date: Thursday, September 07, 2023	Sheet 21 of 58	

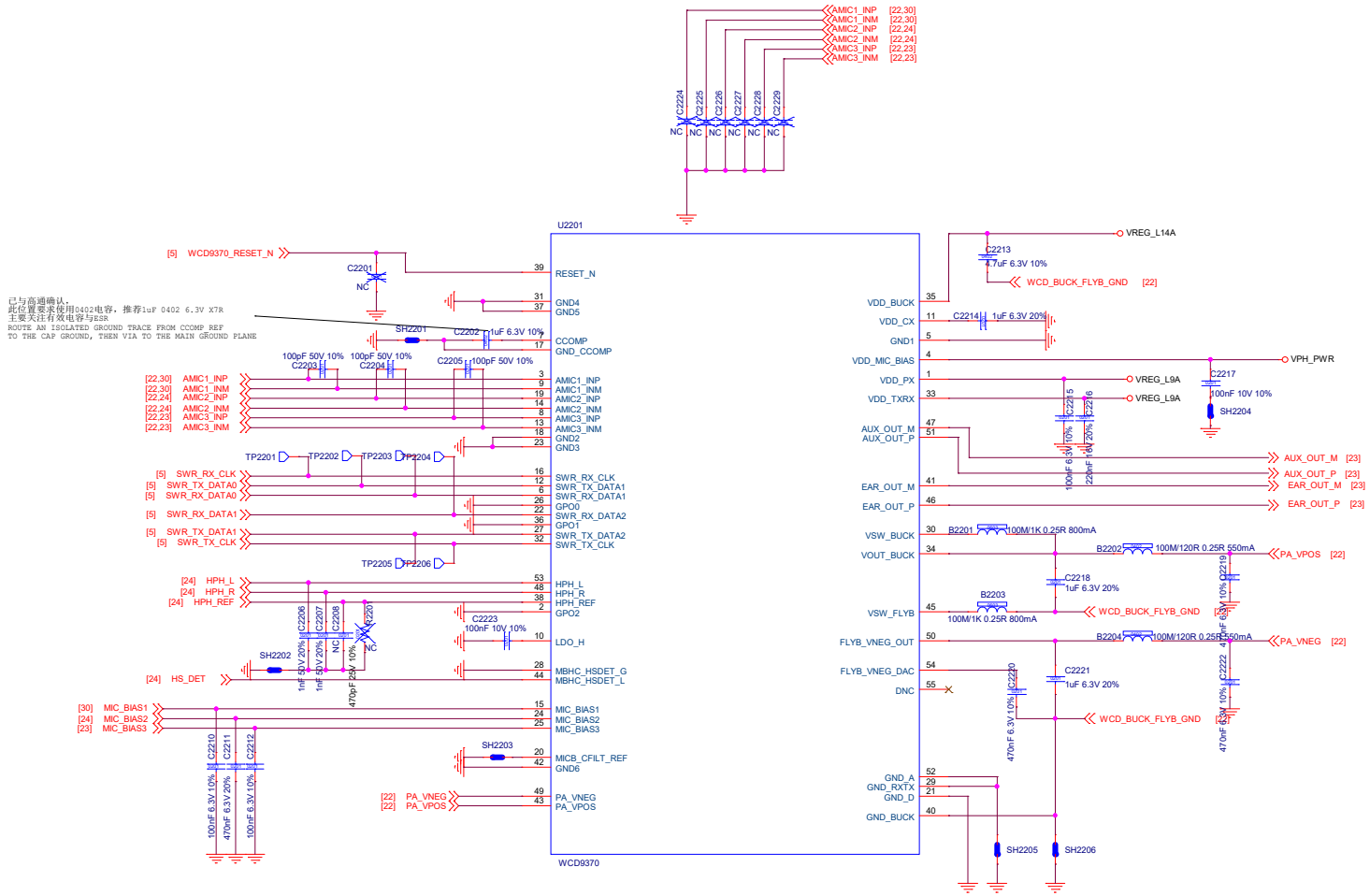

已与高通确认，
此位置要求使用0402电容，推荐1uF 0402 6.3V X7R
主要关注有效电容与ESR
ROUTE AN ISOLATED GROUND TRACE FROM CCOMP REF
TO THE CAP GROUND, THEN VIA TO THE MAIN GROUND PLANE

Title	<Title>	
Size C	Document Number <Doc>	Rev <RevCode>
Date: Thursday, September 07, 2023	Sheet 22 of 58	

PA FOR SPK

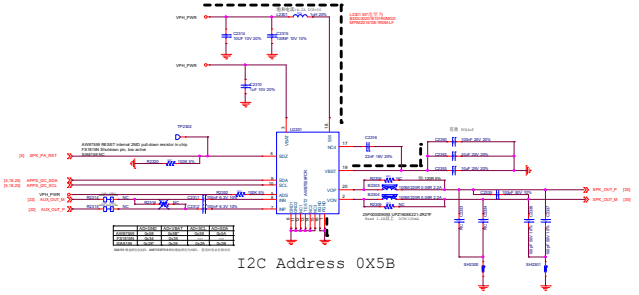

	ADD/SDA	ADD/SCL	ADD/SD	ADD/RF
AW87508	0x58	0x59	0x5A	0x5B
AW87509	0x5C	0x5D	0x5E	0x5F
AW87519	0x64	0x65	0x66	0x67

Sub MIC

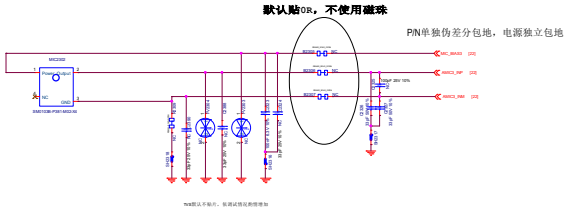

PA FOR RECEIVER

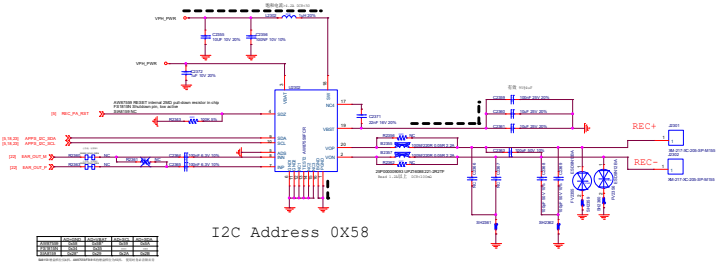

	ADD/SDA	ADD/SCL	ADD/SD	ADD/RF
AW87508	0x58	0x59	0x5A	0x5B
AW87509	0x5C	0x5D	0x5E	0x5F
AW87519	0x64	0x65	0x66	0x67

Title	<Title>		
Size	Document Number		Rev
B	<Doc>		<Rev>
Date:	Thursday, December 07, 2023	Sheet 13 of 40	

Earphone Audio

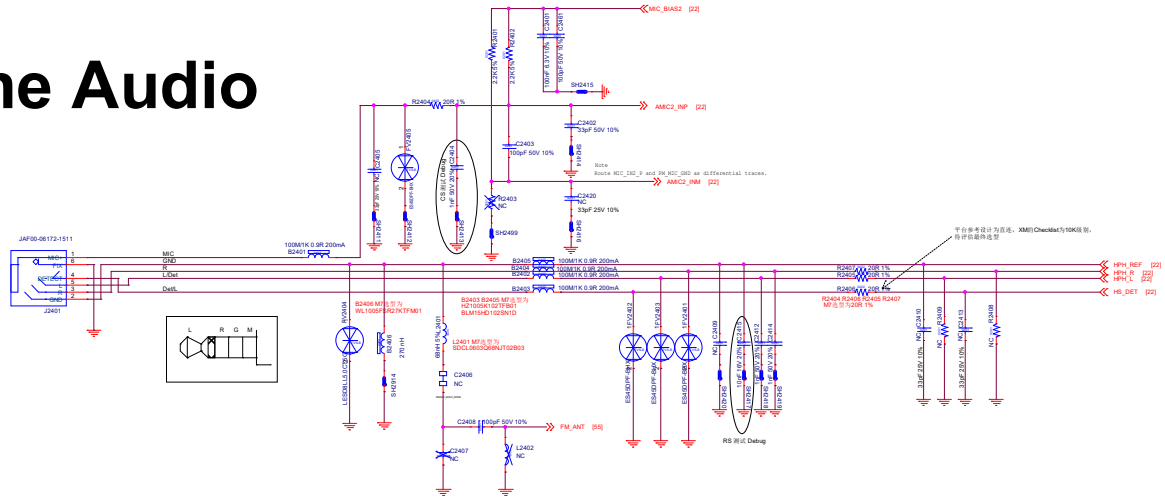

Title	<Title>		
Size D	Document Number <Doc>		Rev <RevCode>
Date: Thursday, September 07, 2023	Sheet 24 of 58		

相机配置：108M (兼容64M) +8M UW+2M Macro

Main Camera 108M/64M

经验：XXX使用C-PHY的摄像头时，出现摄像头概率性不出图的问题。
后查出与C-PHY的驱动能力相关，调试时需留意此问题

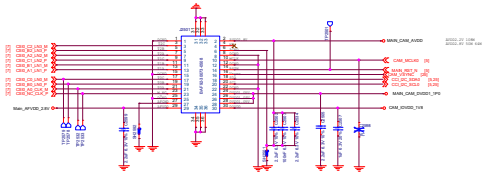

Front Camera 16M

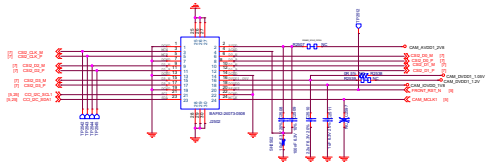

POWER LDO

Main DVDD 1V_108M

WILL&Richtek : Vout= 0.6*(1+R2581/R2582)
SGM:Vout= 0.63*(1+R2581/R2582)

Main DVDD 1.05V_50M

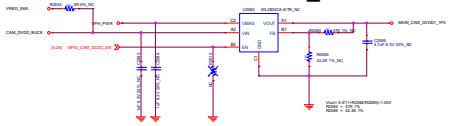

Macro Camera 2M

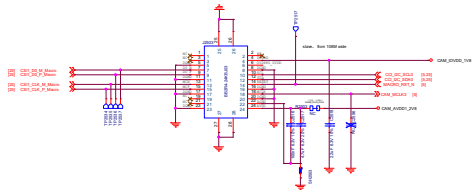

Macro摄像头工作时，Main的IOVDD也要上电。
否则I2C无法通信

WIDE Camera 8M(UW)

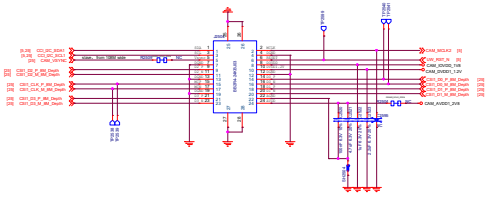

Main AFVDD 2.8V

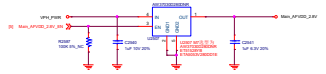

Main AVDD 2V2(108M) 2V8(50M)

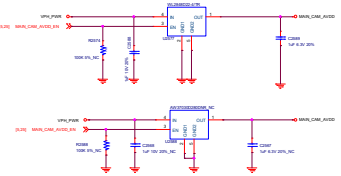

Front+Wide+Macro CAM AVDD 2V8

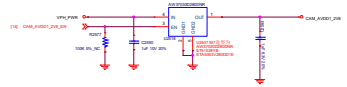

Main+Front+Wide+Macro CAM IOVDD

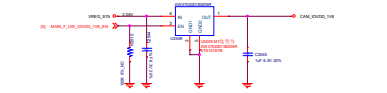

UW+Front Camera DVDD 1.2V

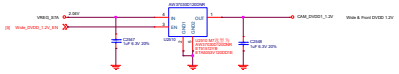

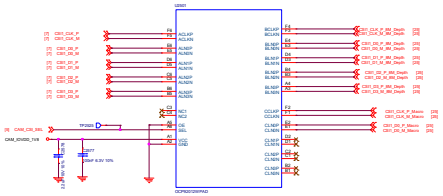

8M WIDE Camera

2M Macro Camera

Front Camera DVDD 1.05V

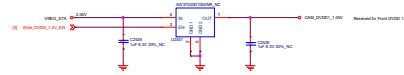

			Module ID	Sensor	I2C	Eeprom	I2C	DRIVER IC	I2C	AVDD	DVDD	IOVDD	AFVDD
Main	108M									2.2	1	1.8	2.8
	50M									2.8	1.1	1.8	2.8
	64M									2.8	1.1	1.8	2.8
	64M									2.8	1.05	1.8	2.8
Front	8M									2.8	1.2	1.8	NA
Wide	8M									2.8	1.2	1.8	NA
Macro	2M									2.8	*1.58V	1.8	NA

位号	输入源	输出：电源网络名	电源应用
U2516	VPH_PWR	CAM_AVDD1_2V8	Front+Wide+Marco+Main(64M) AVDD 2.8V
U2577	VPH_PWR	MAIN_CAM_AVDD2_2P2	Maint 108M) AVDD 2.2V
U2580	VPH_PWR	MAIN_CAM_DVDD2_1P05	108M/64M Main DVDD 1.05V
U2510	VREG_S7A 2.04V	CAM_DVDD1_1.2V	Wide & Front DVDD 1.2V
U2582	MAIN_CAM_DVDD2_1P05/VREG_S6A	MAIN_CAM_DVDD2_1P05	108M/64M Main DVDD 1.05V 照明 主camera LDO
U2507	VPH_PWR	Main_AFVDD_2.8V	108M/64M Main AFDVDD 2.8V
U2509	VREG_S7A 2.04V	CAM_IOVDD_1V8	Main+Front+Wide IOVDD + Macro IOVDD 1.8V 调试屏幕时需注意，选型时需注意Drop 电压

A+G-Sensor

摆件需注意：
1、远离热源
2、远离应力中心与重灾区
3、远离强电流与CPU

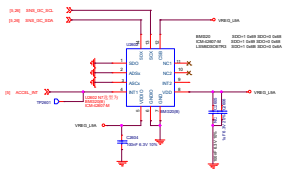

IRLED

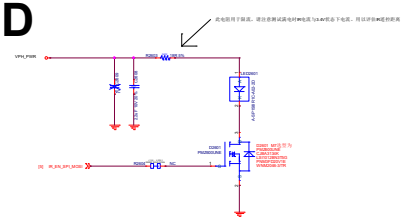

M SENSOR

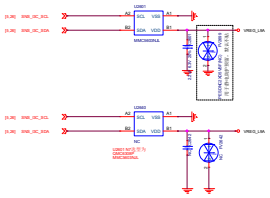

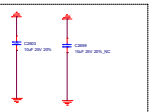

保护Msensor使用，
比M sensor高一些的便宜电容即可

FP-Sensor

走线需注意：
1、走线必须从连接器先到TVS再到电阻
2、TVS至连接器段需加粗走线并尽力上下左右包地
3、驱动调试时需注意ESD机制的设计，当电源共用时避免SAR与ALS+PS sensor 失效

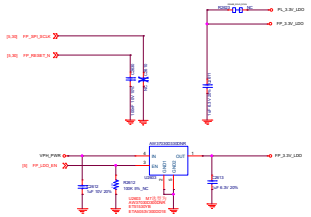

PL -sensor

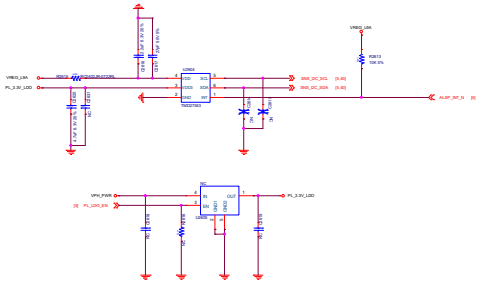

LCM BTB

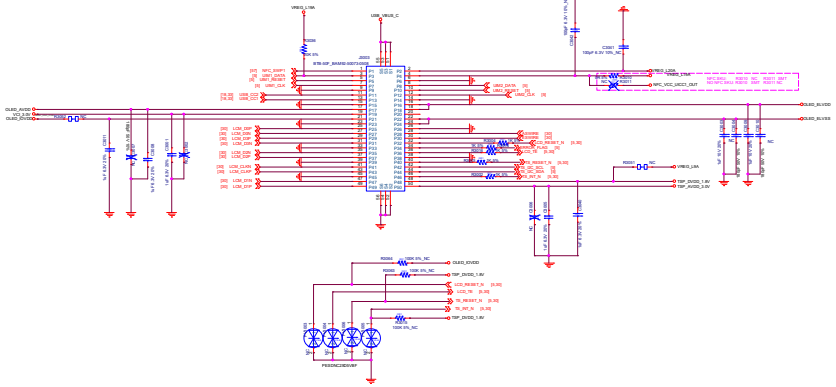

SUB BTB

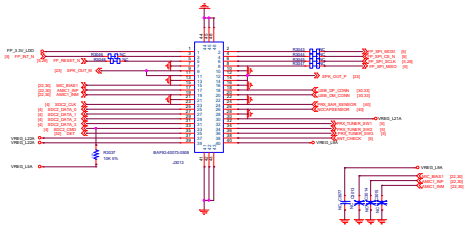

USB EMI

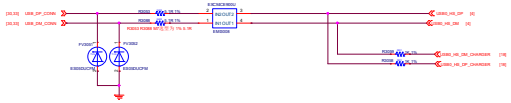

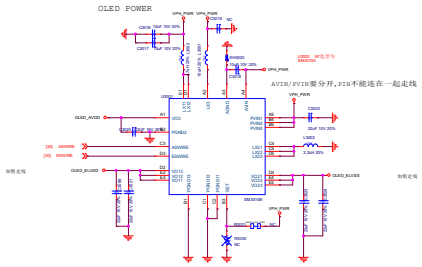

CTP_AVDD 3.0V

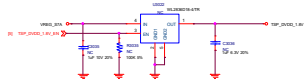

预留 CTP_DVDD 1.8V

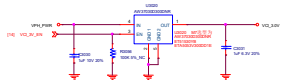

LCM_VCCI 3.0V

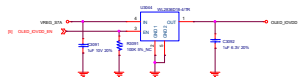

OLED_IOVDD 1.8V

默认使用短接电阻（焊盘已连通），不贴EMI Filter

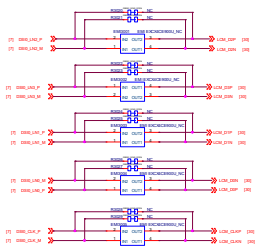

SIM_SD CARD DET

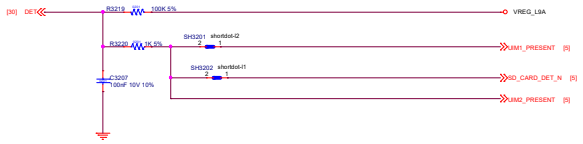

Title	<Title>	
Size D	Document Number <Doc>	Rev <RevCode>
Date: Thursday, September 07, 2023	Sheet 32 of 58	

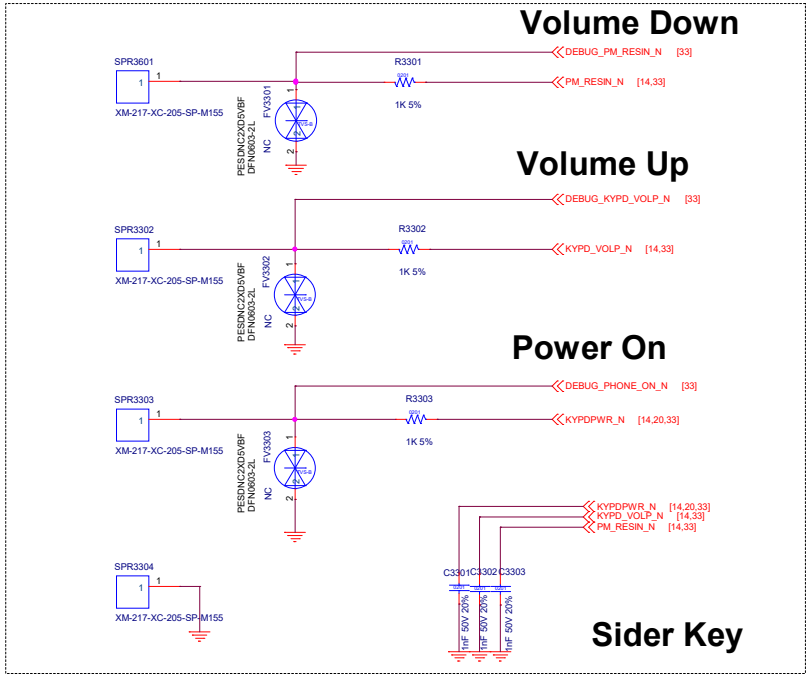

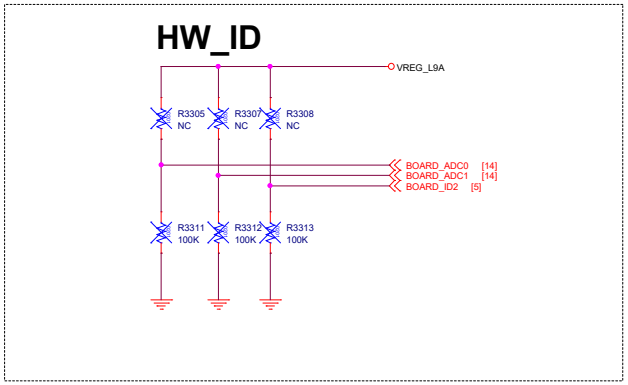

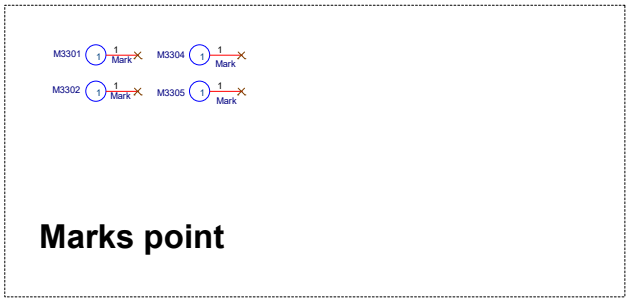

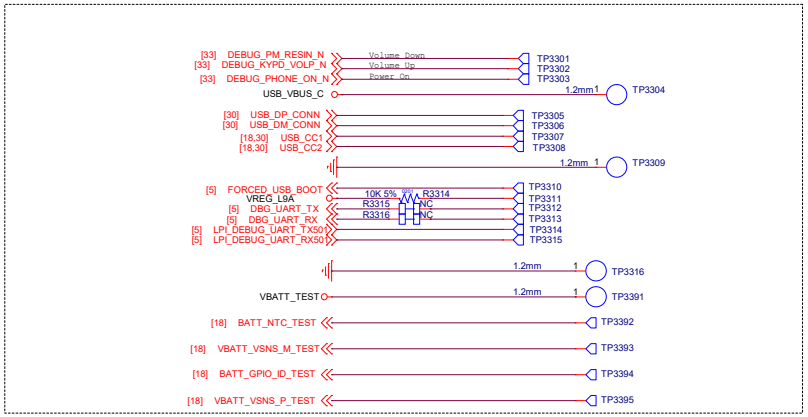

屏蔽盖

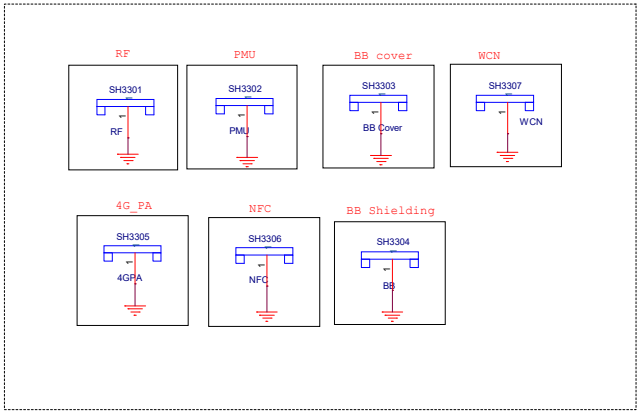

Title <Title>		
Size C	Document Number <Doc>	Rev <RevCode>
Date: Thursday, September 07, 2023	Sheet 33 of 58	

SAR sensor

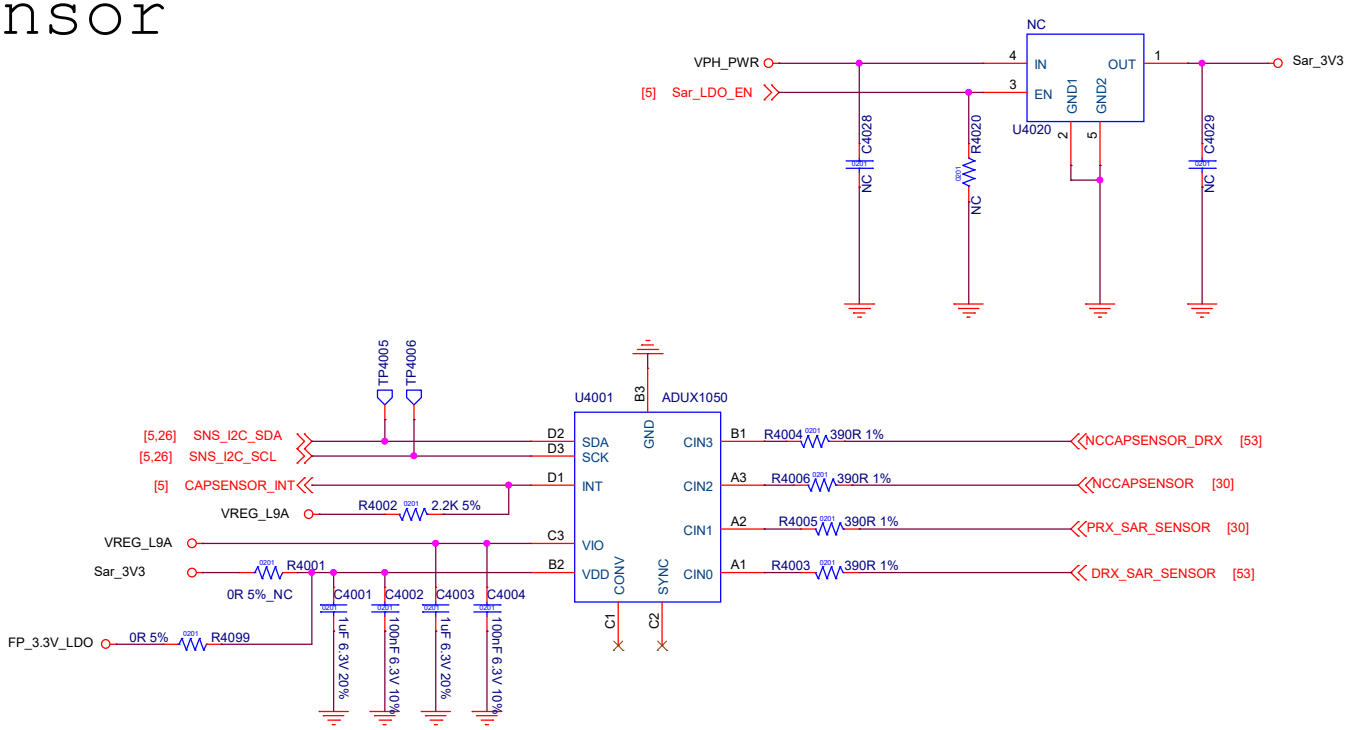

Title	40_RF_SARSenor	
Size B	Document Number <Doc>	Rev 1.0
Date: Thursday, September 07, 2023	Sheet 40 of 58	

WTR3925_PWR

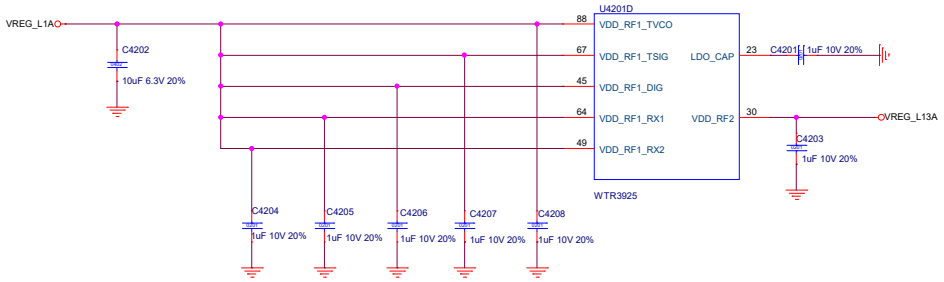

Title	41_WTR3925_WMSS	
Size C	Document Number <Doc>	Rev 1.0
Date: Thursday, September 07, 2023	Sheet 42 of 58	

SDR735_TX_RX

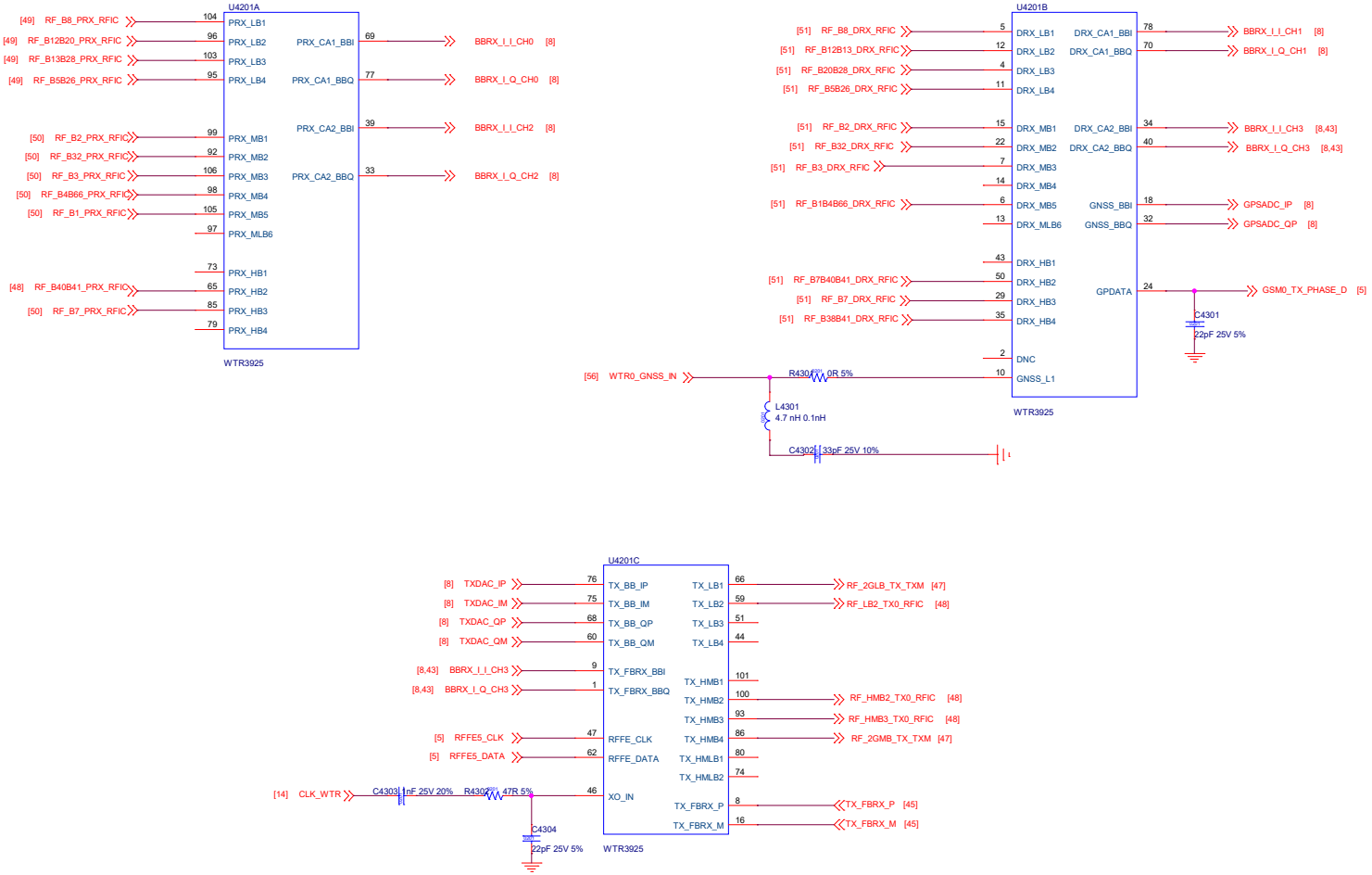

Title	41_WTR3925_WMSS	
Size C	Document Number <Doc>	Rev 1.0
Date: Thursday, September 07, 2023	Sheet 43 of 58	

SDR735_GND

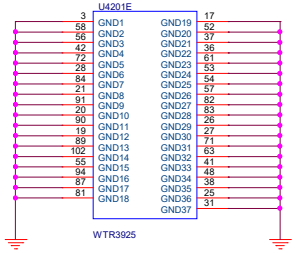

Title	41_WTR3925_WMSS	
Size C	Document Number <Doc>	Rev 1.0
Date: Thursday, September 07, 2023	Sheet 44 of 58	

RF_FBRX

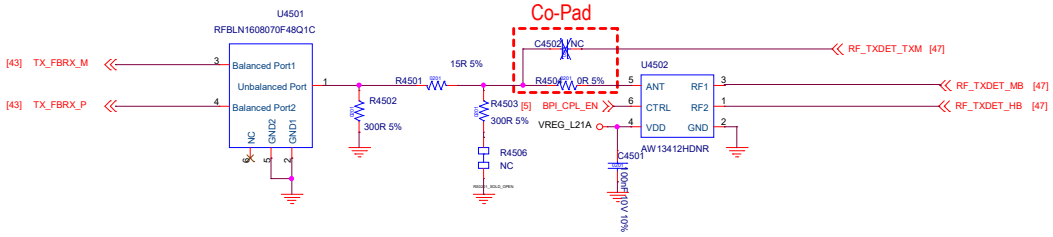

Title	45_RF_FBRX	
Size C	Document Number <Doc>	Rev 1.0
Date: Thursday, September 07, 2023	Sheet 45 of 58	

RF_TXM

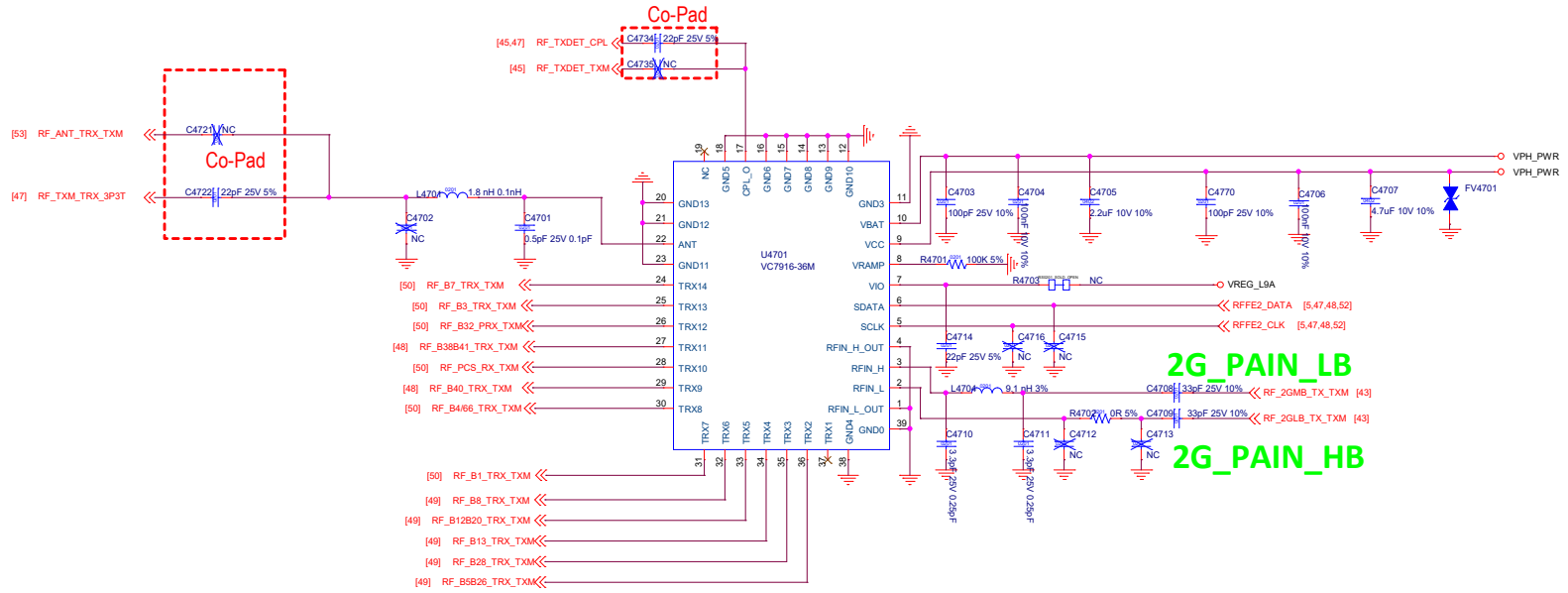

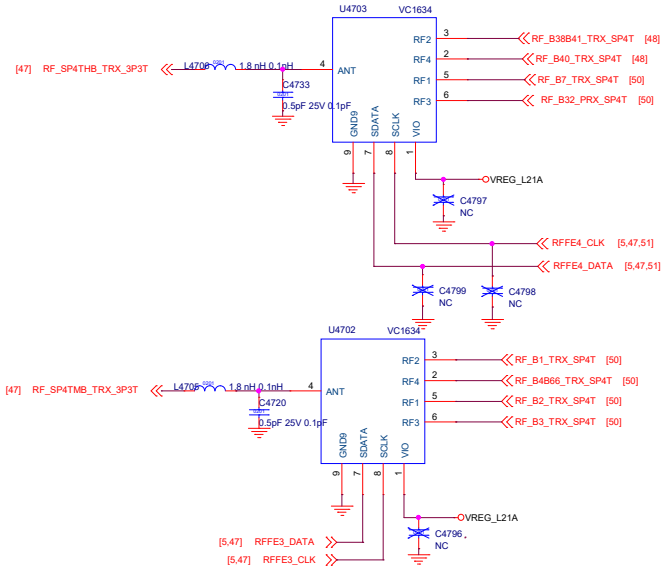

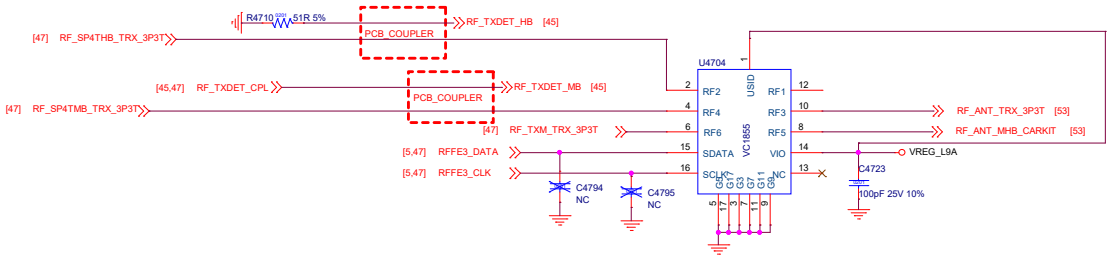

Title	47_RF_TXM		
Size C	Document Number <Doc>		Rev 1.0
Date: Thursday, September 07, 2023	Sheet 47 of 58		

48_RF_PA

4G PA input need LPF for harmonic rejection

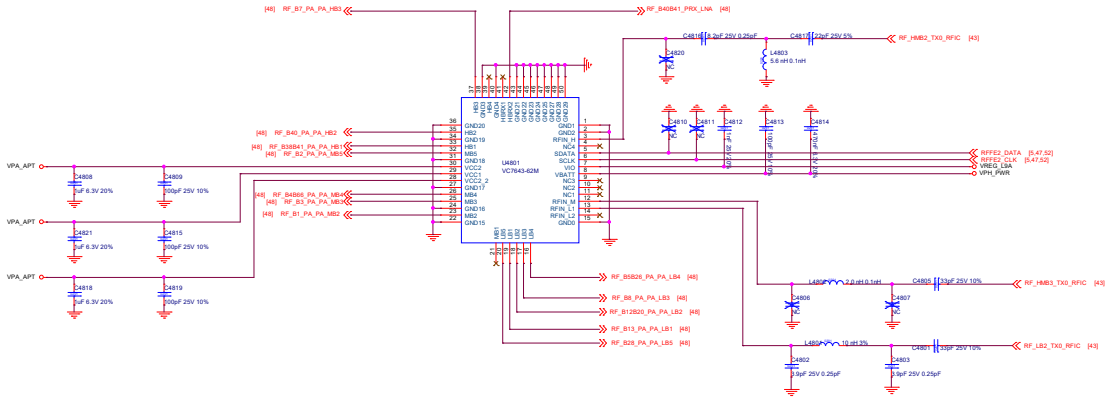

PA Therm

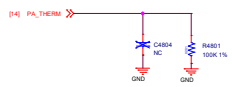

R3923 and C3991 close to PA , and located in the same layer

GND

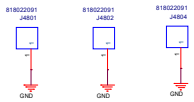

B8 TX

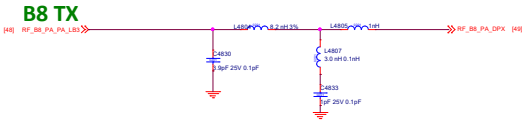

B1 TX

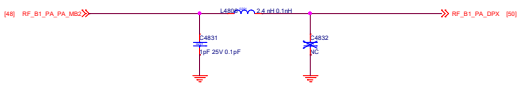

B41 TRX

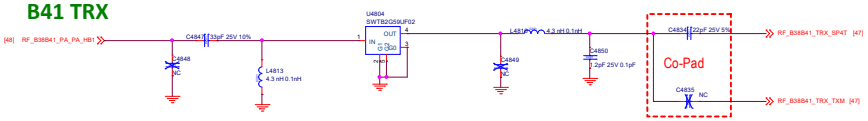

B5 TX

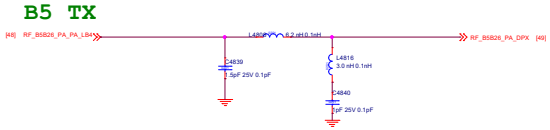

B2 TX

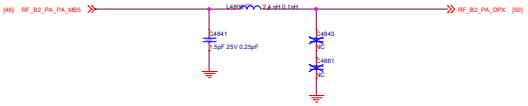

B40 TRX

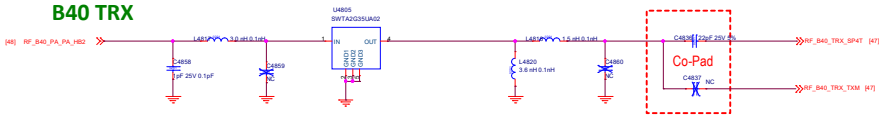

B13 TX

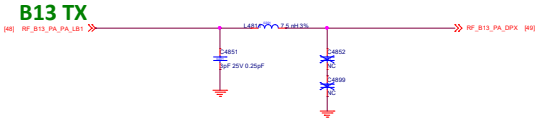

B4/B66 TX

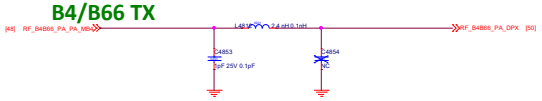

B12/20 TX

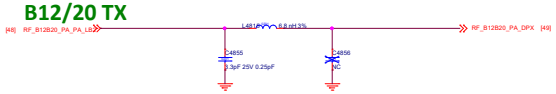

B3 TX

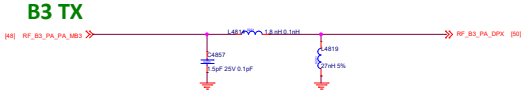

B40 B41 PRX LNA

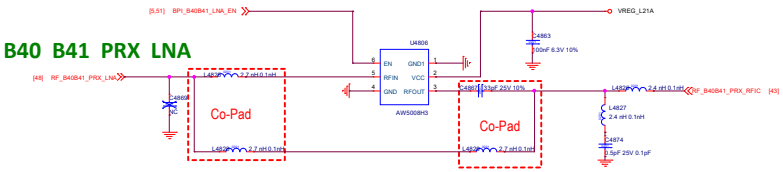

B28 TX

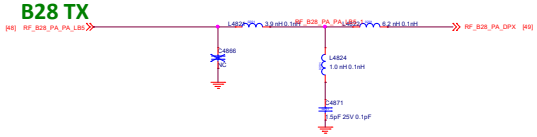

B7 TX

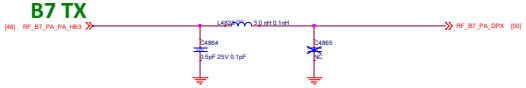

Title	48_RF_TX	
Size D	Document Number <Doc>	Rev <RevCode>
Date: Thursday, September 07, 2023	Sheet 48 of 58	

49_RF_TRX_LB

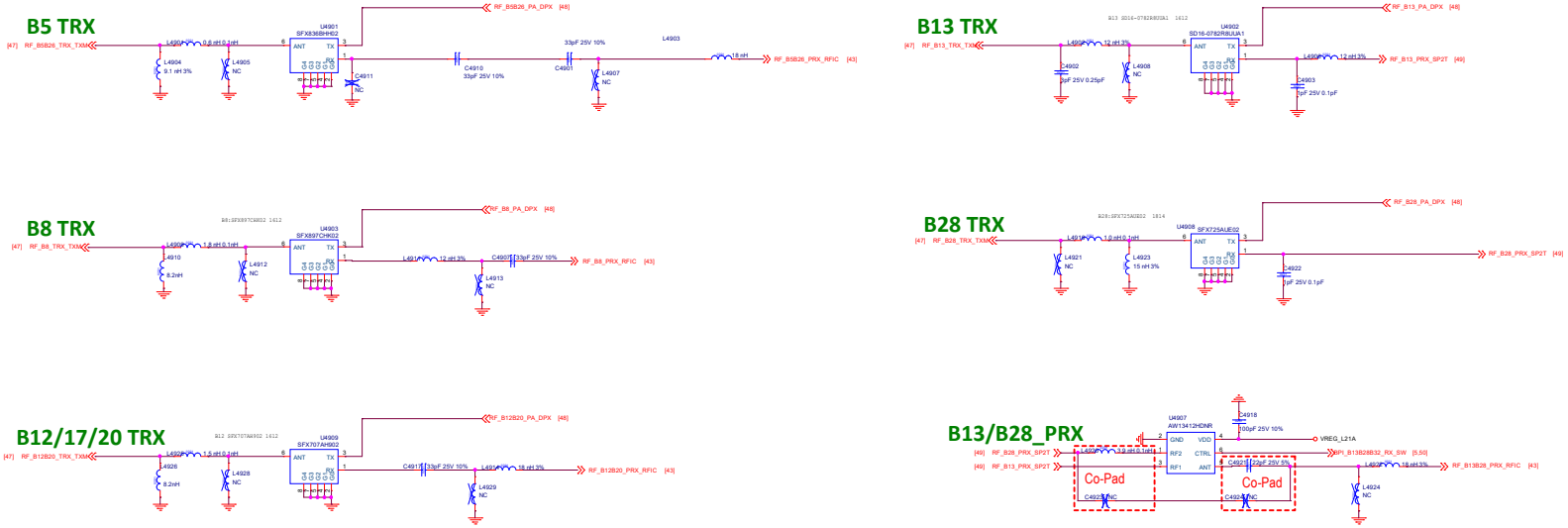

Title	49_RF_TRX_LB		
Size D	Document Number <Doc>		Rev <RevCode>
Date: Thursday, September 07, 2023	Sheet 49 of 58		

50_RF_TRX_MHB

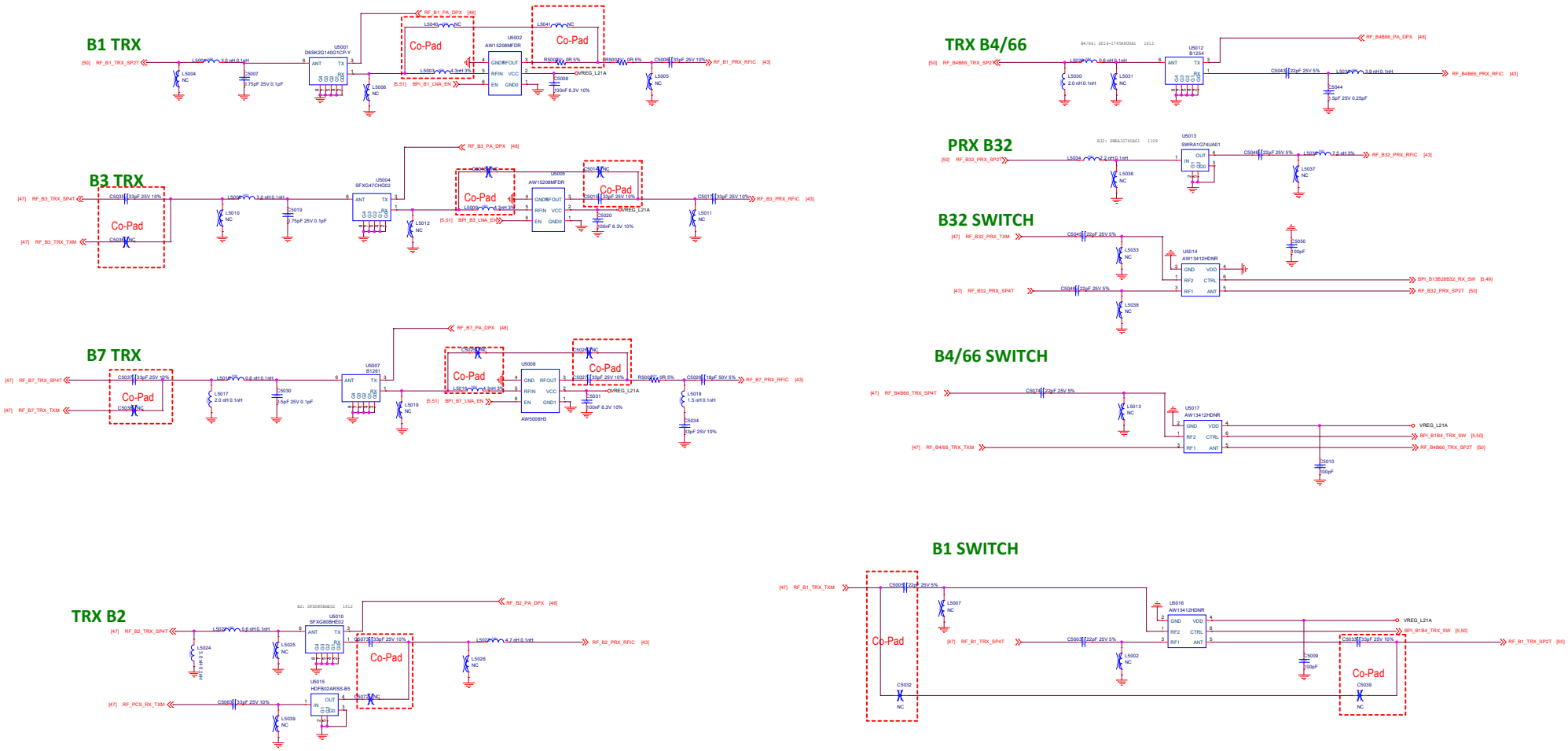

Title	50_RF_TRX_MHB		
Size D	Document Number <Doc>		Rev <RevCode>
Date: Thursday, September 07, 2023	Sheet 50 of 58		

RF_DRX_DiFEM

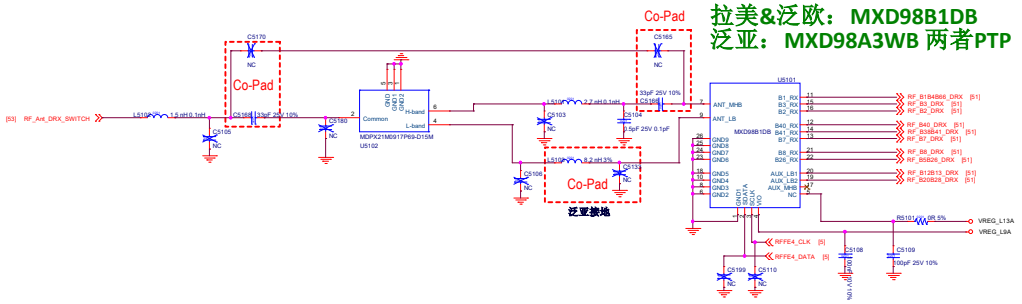

B5 DRX

B1/4/66 DRX

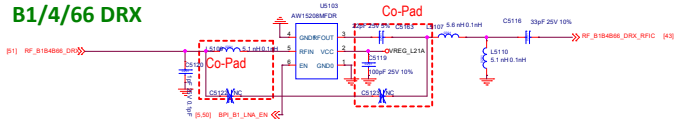

B8 DRX

B3 DRX

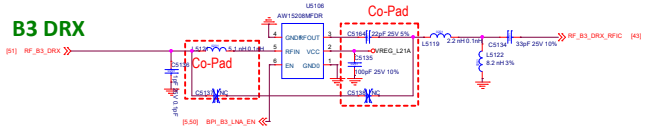

B38/41 DRX

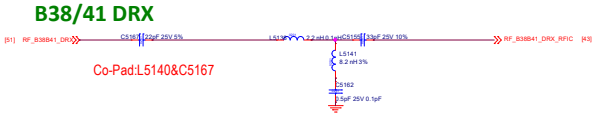

B12/13/17 DRX

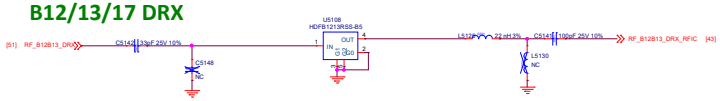

B2 DRX

B7+B40+B38/41 DRX

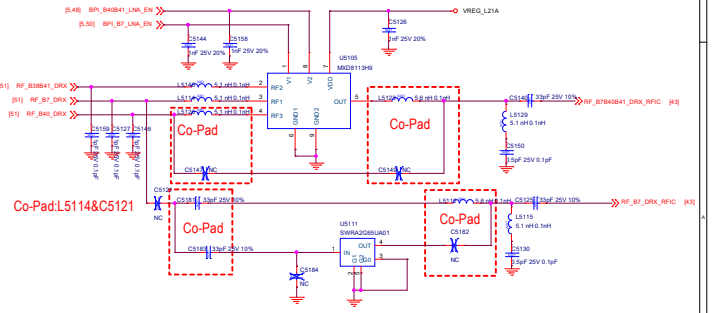

B20/28 DRX

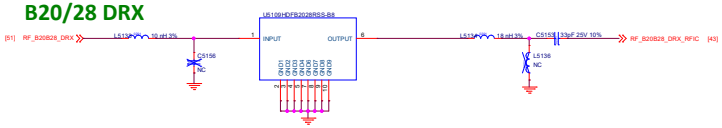

B32 DRX

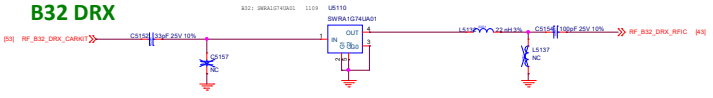

Title	51_RF_DRX_DiFEM		
Size D	Document Number <Doc>		Rev 1.0
Date: Thursday, September 07, 2023	Sheet 51 of 58		

RF_QET4101

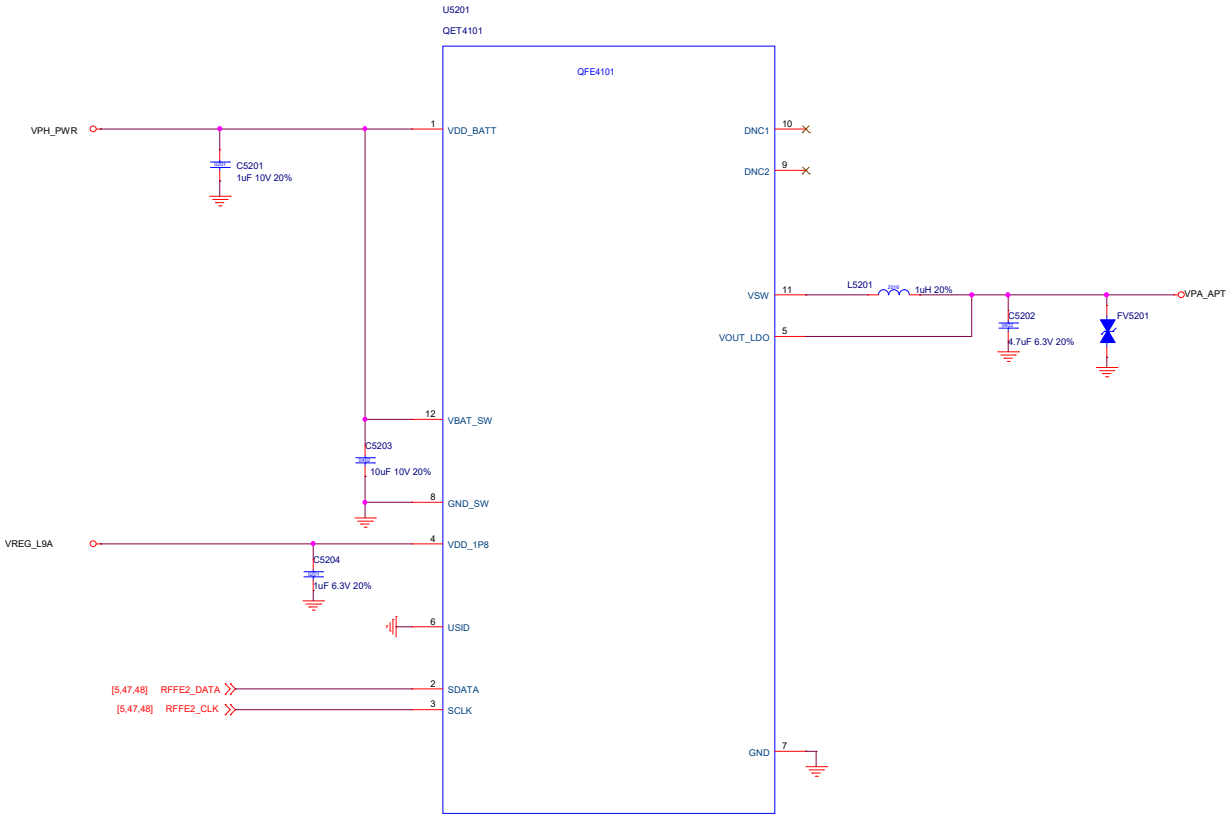

Title	52_RF_QET4101	
Size C	Document Number <Doc>	Rev 1.0
Date: Thursday, September 07, 2023	Sheet 52 of 58	

RF_ANT

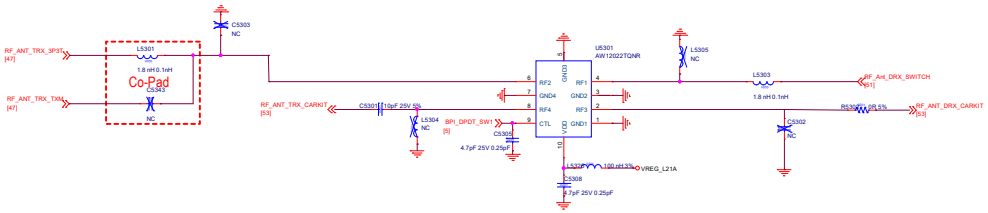

MAIN TRX ANT

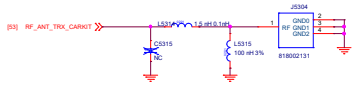

ANT_B32_DRX

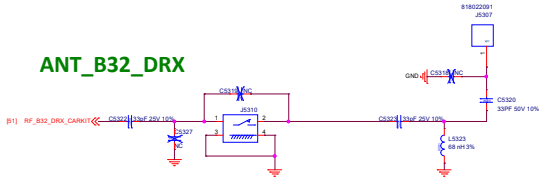

DIV_RX_ANT

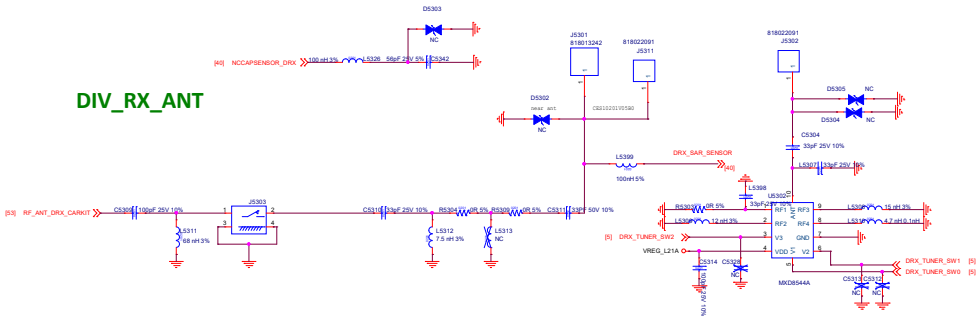

CA TRX ANT

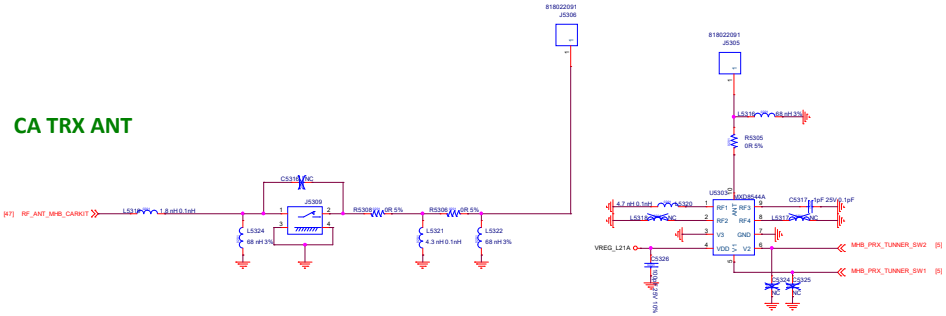

File	53_RF_ANT	
Size D	Document Number <Doc>	Rev 1.0
Date: Saturday, September 23, 2023	Sheet 53 of 58	

WCN3988

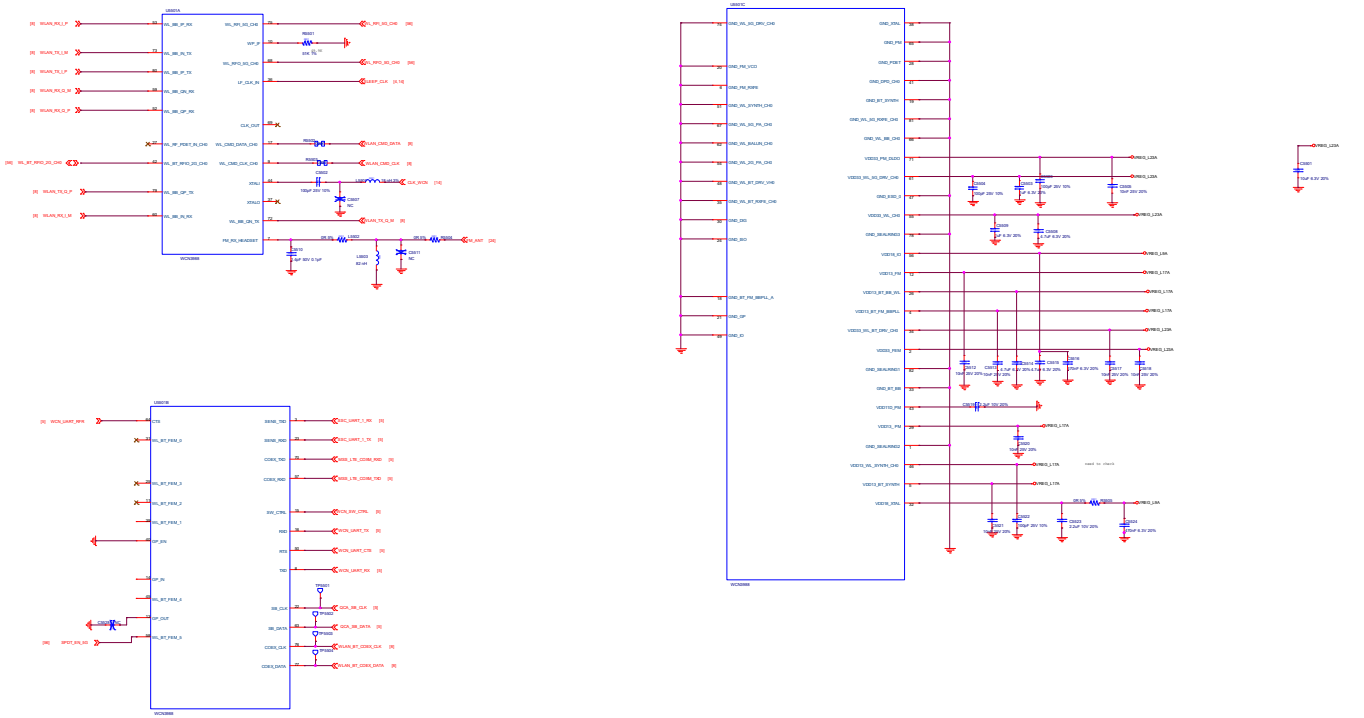

Title	BB_WCN3988		
Size	Document Number		Rev
B	<Doc>		1.0
Date:	Monday, September 07, 2015	Sheet	of

WCN_TRX

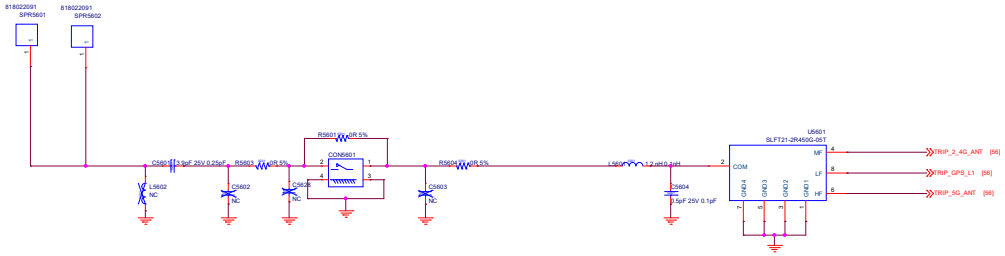

2_4G WIFI

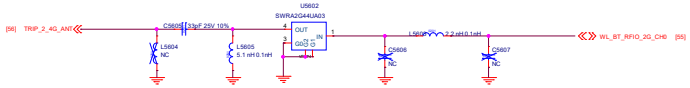

5G WIFI

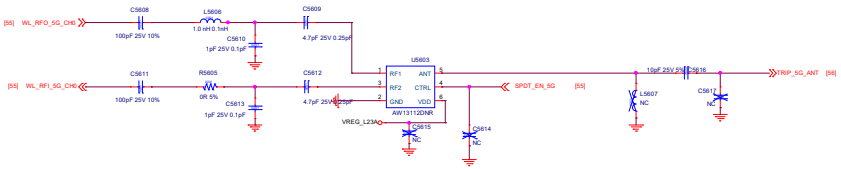

GPS

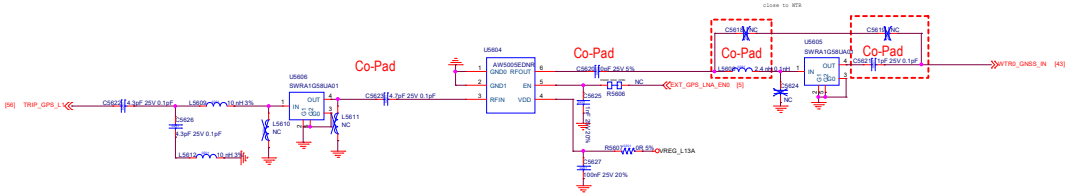

Title	56_WCN_TRX		
Size D	Document Number <Doc>		Rev 1.0
Date: Thursday, September 07, 2023	Sheet 56 of 58		

NFC

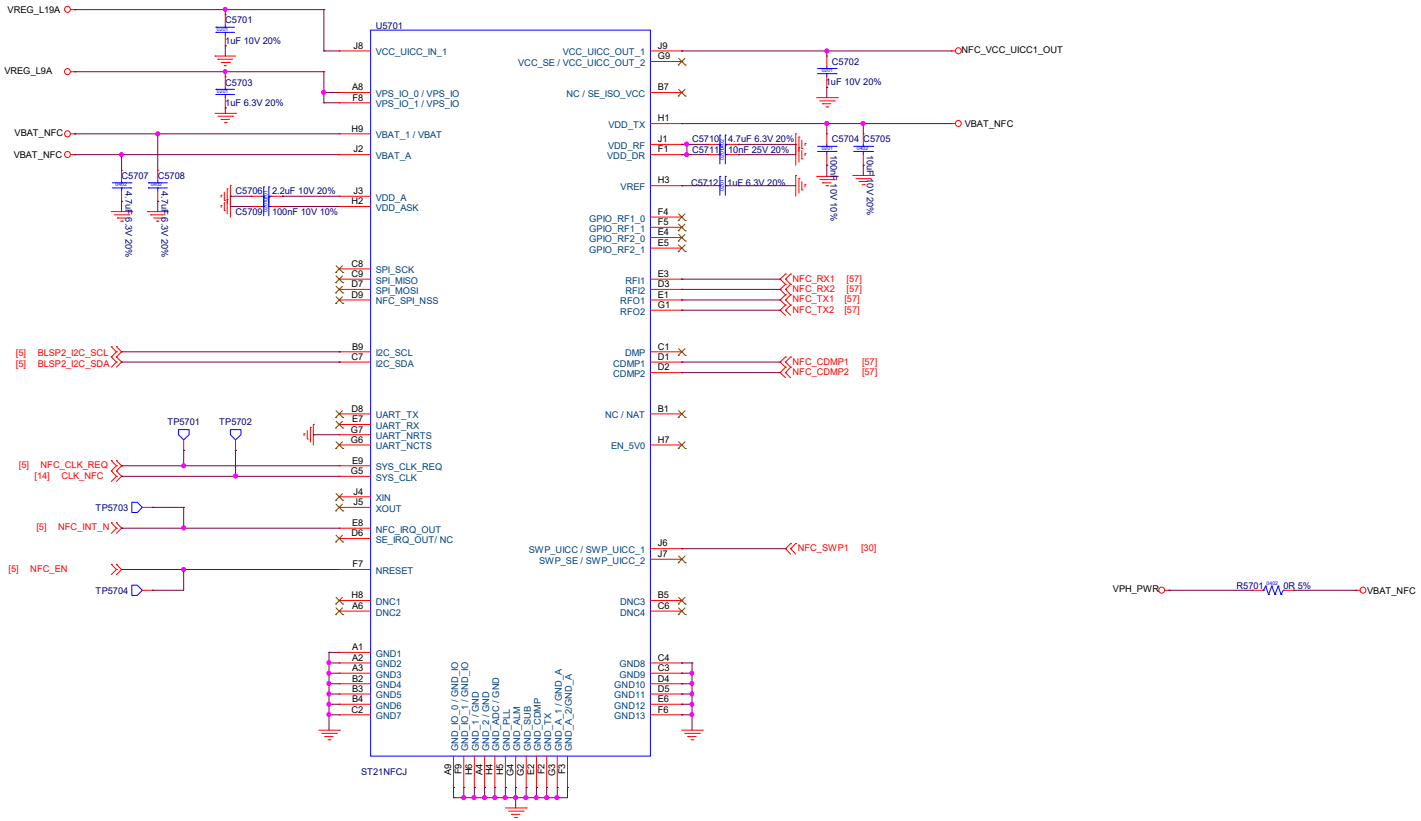

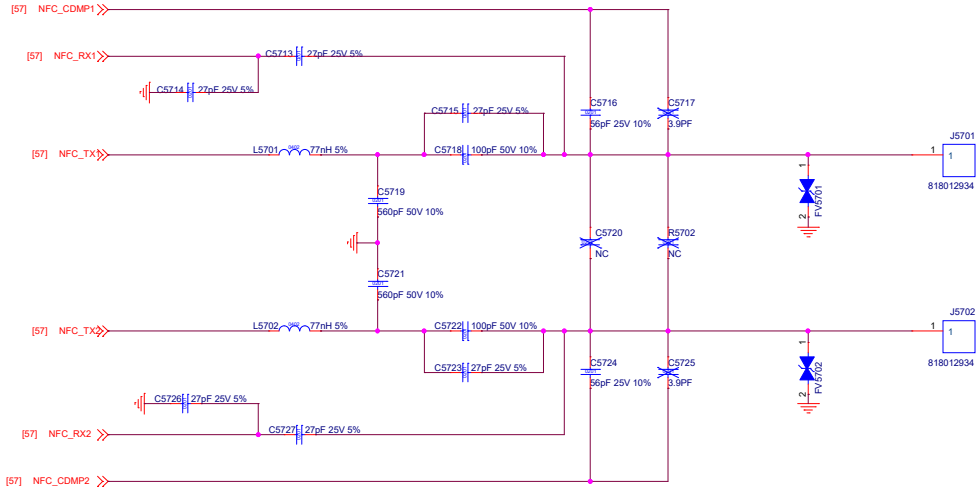

Title	57_NFC	
Size C	Document Number <Doc>	Rev 1.0
Date: Thursday, September 07, 2023	Sheet 57 of 58	

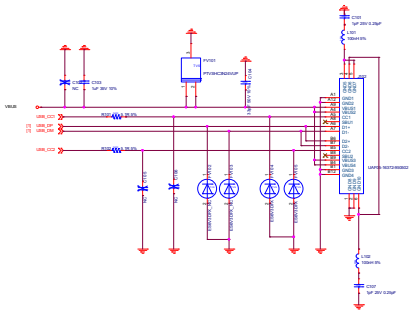

TYPE-C Connect

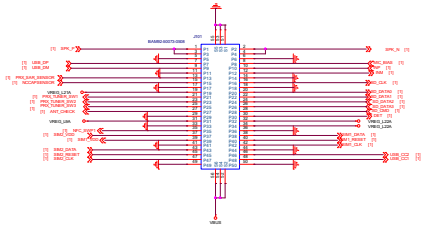

SUB Connect

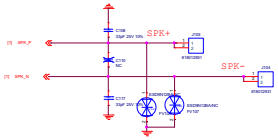

SPK

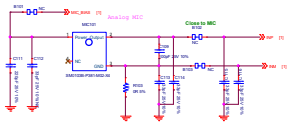

MIC

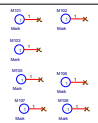

Marks point

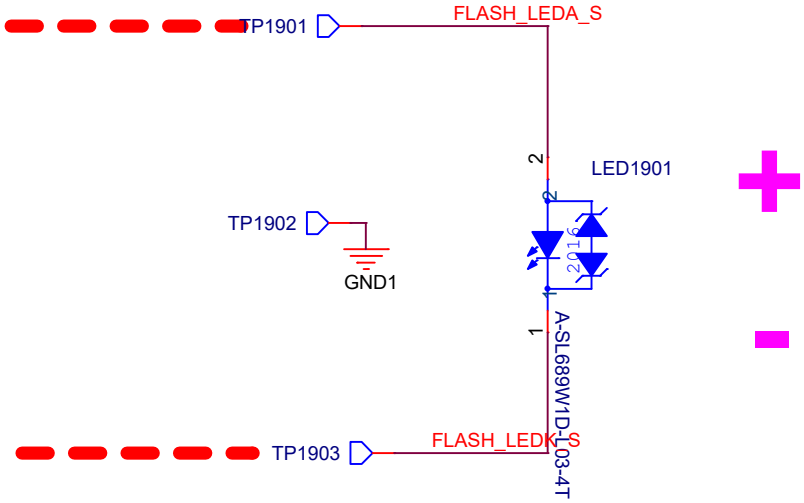

Title	<Title>	
Size A	Document Number <Doc>	Rev <RevCode>
Date: Wednesday, August 16, 2023	Sheet 1 of 1	

MAIN ANT

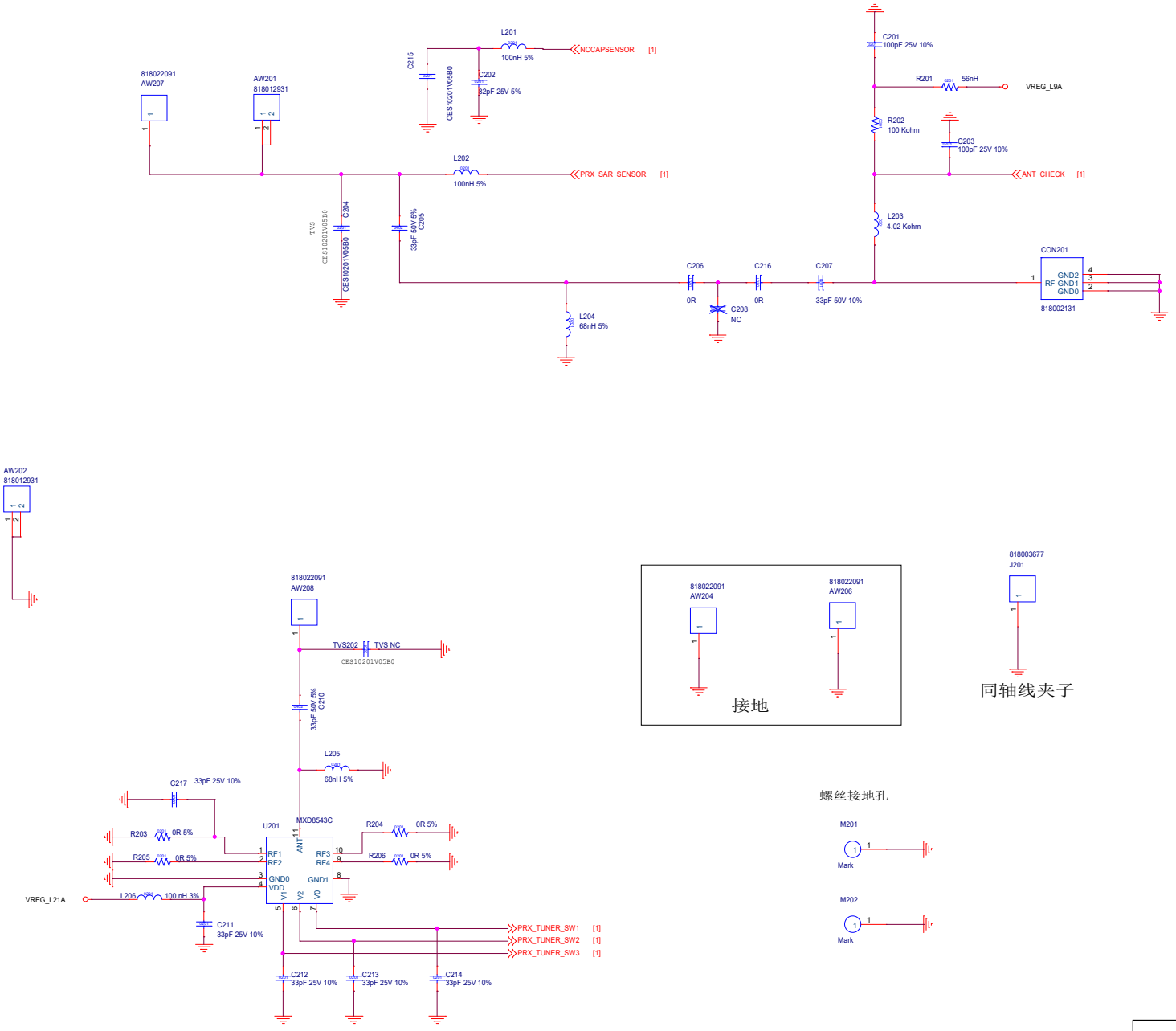

Title	<Title>	
Size C	Document Number <Doc>	Rev <RevCode>
Date: Friday, August 18, 2023	Sheet 2 of 4	

SD+SIM CARD

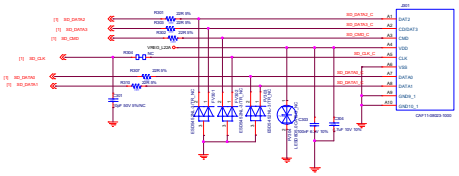

SIM1 CARD

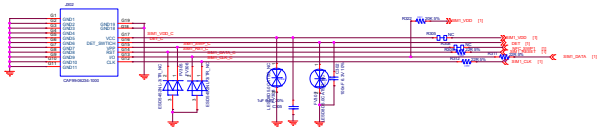

SIM卡

SIM2 CARD

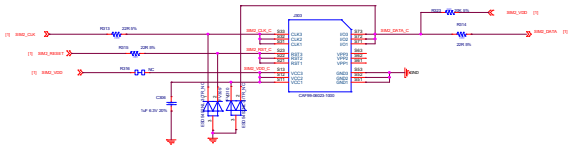

Title	<Title>		
Size	Document Number		Rev
B	<Doc>		<Rev>
Date:	Monday, September 07, 2015	Sheet 5 of 6	

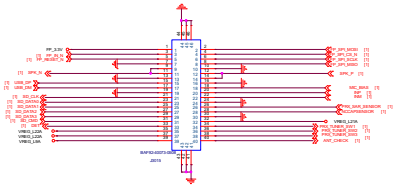

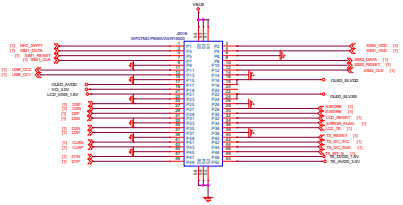

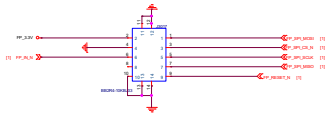

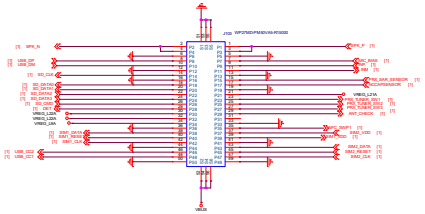

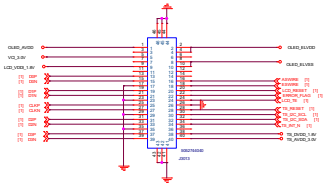

1、VCI(Display power) 2.7V~3.3V 范围: 2.7V~3.3V 最大电流: 150mA, 纹波要求<10mV
VCI 电源要求稳定且干扰小

2、LCD_VDD3(Display power) 1.65V~1.95V 范围: 1.65V~1.95V 最大电流: 150mA, 纹波要求<10mV
LCD_VDD3 电源要求稳定且干扰小

3、CLED_AVDD(Backlight power)

4、CLED_BLVDD(Backlight power) 范围电源输出: 7V~1.5V(降压), 长度: 7V~1.5V(降压);
CLED_BLVDD 电源要求<10mV, 纹波<100mV

5、VCI (Back) 范围电源输出3V~3.3V; 最大电流要求<20mA(根据实际要求);
纹波<10mV; 降压电路

6、LCD_VDD3(Back) 参考电压1.4~1.7V; 范围电源输出1mA左右; 最大电流要求<1mA(根据实际要求);
纹波<10mV; 降压电路

7、CLED_AVDD(Back) 参考电压: 4.4V(根据实际要求); 范围电源输出10mA左右; 最大电流要求<10mA

8、CLED_BLVDD(Back) 参考电压: -1.5~-7V; 范围电源输出10mA左右; 最大电流要求<10mA

9、CLED_GND (Back)

10、CLED_GND (Back)

Title	<Title>		
Size	Document Number		Rev
B	<Doc>		<Rev>
Date:	Monday, June 06, 2022	Sheet	12 of 12